SECTION HAC

HEATER & AIR CONDITIONING CONTROL SYSTEM

CONTENTS

WITHOUT 7 INCH DISPLAY

BASIC INSPECTION 6

DIAGNOSIS AND REPAIR WORKFLOW 6
Work Flow 6

INSPECTION AND ADJUSTMENT 8
Description & Inspection 8
Temperature Setting Trimmer 10
Foot Position Setting Trimmer 10
Inlet Port Memory Function (FRE) 11
Inlet Port Memory Function (REC) 11

FUNCTION DIAGNOSIS 12

COMPRESSOR CONTROL FUNCTION 12
Description 12
Fail-Safe 13
Component Part Location 13
Component's Role 15

AUTOMATIC AIR CONDITIONER SYSTEM 17
System Diagram 17
System Description 17
Component Part Location 24
Component Description 26

MODE DOOR CONTROL SYSTEM 28
System Diagram 28
System Description 28

AIR MIX DOOR CONTROL SYSTEM 30
System Diagram 30
System Description 30

INTAKE DOOR CONTROL SYSTEM 32
System Diagram 32
System Description 32

BLOWER MOTOR CONTROL SYSTEM 34
System Diagram 34
System Description 34

MAGNET CLUTCH CONTROL SYSTEM 36
System Diagram 36
System Description 36

CAN COMMUNICATION SYSTEM 37
System Description 37

DIAGNOSIS SYSTEM (HVAC) 38
CONSULT-III Function 38

COMPONENT DIAGNOSIS 42

U1000 CAN COMM CIRCUIT 42
Description 42
DTC Logic 42
Diagnosis Procedure 42

U1010 CONTROL UNIT (CAN) 43
Description 43
DTC Logic 43
Diagnosis Procedure 43

B257B, B257C AMBIENT SENSOR 44
Description 44
DTC Logic 44
Diagnosis Procedure 45
Component Inspection 46

B2578, B2579 IN-VEHICLE SENSOR 47
Description 47
DTC Logic 47
Diagnosis Procedure 48
Component Inspection 49

B2581, B2582 INTAKE SENSOR 50
Description 50
DTC Logic 50
Diagnosis Procedure 50
Component Inspection 51

B2630, B2631 SUNLOAD SENSOR 53
Description 53

DTC Logic 53
Diagnosis Procedure 54
Component Inspection 55

B2632, B2633 AIR MIX DOOR MOTOR (DRIVER SIDE) 56
Description 56
DTC Logic 56
Diagnosis Procedure 57

B2634, B2635 AIR MIX DOOR MOTOR (PASSENGER SIDE) 58
Description 58
DTC Logic 58
Diagnosis Procedure 59

B2636, B2637, B2638, B2639, B2654, B2655 MODE DOOR MOTOR 60
Description 60
DTC Logic 60
Diagnosis Procedure 61

B263D B263E, B263F, B2656 INTAKE DOOR MOTOR 63
Description 63
DTC Logic 63
Diagnosis Procedure 64

POWER SUPPLY AND GROUND CIRCUIT 65

A/C AUTO AMP. 65
A/C AUTO AMP. : Diagnosis Procedure 65

A/C CONTROL 65
A/C CONTROL : Diagnosis Procedure 65

A/C DISPLAY 66
A/C DISPLAY : Diagnosis Procedure 66

A/C AUTO AMP. 67
Description 67
Component Function Check 67
Diagnosis Procedure 67

BLOWER MOTOR 68
Description 68
Component Function Check 68
Diagnosis Procedure 68
Component Inspection 71

MAGNET CLUTCH 72
Description 72
Component Function Check 72
Diagnosis Procedure 72

A/C CONTROL SIGNAL CIRCUIT 74
Diagnosis Procedure 74

ECU DIAGNOSIS 75

A/C AUTO AMP. 75
Reference Value 75
Wiring Diagram - AIR CONDITIONER CONTROL SYSTEM - 77
Fail-Safe 84
DTC Inspection Priority Chart 85
DTC Index 85

SYMPTOM DIAGNOSIS 87

AIR CONDITIONER CONTROL 87
Diagnosis Chart By Symptom 87

INSUFFICIENT COOLING 88
Description 88
Inspection procedure 88

INSUFFICIENT HEATING 91
Description 91
Inspection procedure 91

NOISE 94
Description 94
Inspection procedure 94

MEMORY FUNCTION DOES NOT OPERATE.. 96
Description 96
Inspection procedure 96

PRECAUTION 97

PRECAUTIONS 97
Precaution for Supplemental Restraint System (SRS) "AIR BAG" and "SEAT BELT PRE-TENSIONER" 97
Precaution Necessary for Steering Wheel Rotation after Battery Disconnect 97
Precaution for Procedure without Cowl Top Cover... 98
Precautions For Xenon Headlamp Service 98
Working with HFC-134a (R-134a) 98
General Refrigerant Precaution 99
Refrigerant Connection 99
Service Equipment 101

COMPRESSOR 104
General Precautions 104

FLUORESCENT LEAK DETECTOR 105
General Precautions 105

WITH 7 INCH DISPLAY

BASIC INSPECTION 106

DIAGNOSIS AND REPAIR WORKFLOW 106
Work Flow 106

INSPECTION AND ADJUSTMENT 108

WITHOUT INTELLIGENT AIR CONDITIONER SYSTEM 108
WITHOUT INTELLIGENT AIR CONDITIONER SYSTEM : Description & Inspection 108
WITHOUT INTELLIGENT AIR CONDITIONER SYSTEM : Temperature Setting Trimmer 110

WITHOUT INTELLIGENT AIR CONDITIONER SYSTEM : Foot Position Setting Trimmer 110
WITHOUT INTELLIGENT AIR CONDITIONER SYSTEM : Inlet Port Memory Function (FRE) 111
WITHOUT INTELLIGENT AIR CONDITIONER SYSTEM : Inlet Port Memory Function (REC) 111

WITH INTELLIGENT AIR CONDITIONER SYSTEM 111
WITH INTELLIGENT AIR CONDITIONER SYSTEM : Description & Inspection 112
WITH INTELLIGENT AIR CONDITIONER SYSTEM : Temperature Setting Trimmer 114
WITH INTELLIGENT AIR CONDITIONER SYSTEM : Foot Position Setting Trimmer 114
WITH INTELLIGENT AIR CONDITIONER SYSTEM : Inlet Port Memory Function (FRE) 115
WITH INTELLIGENT AIR CONDITIONER SYSTEM : Inlet Port Memory Function (REC) 115
WITH INTELLIGENT AIR CONDITIONER SYSTEM : Gas Sensor Sensitivity Adjustment Function (With Intelligent Air Conditioner System) 116
WITH INTELLIGENT AIR CONDITIONER SYSTEM : Clean Switch Interlocking Movement Change Function (With Intelligent Air Conditioner System) 116

FUNCTION DIAGNOSIS 117

COMPRESSOR CONTROL FUNCTION 117
Description 117
Fail-Safe 118
Component Part Location 118
Component's Role 120

AUTOMATIC AIR CONDITIONER SYSTEM .. 122

WITHOUT INTELLIGENT AIR CONDITIONER SYSTEM 122
WITHOUT INTELLIGENT AIR CONDITIONER SYSTEM : System Diagram 122
WITHOUT INTELLIGENT AIR CONDITIONER SYSTEM : System Description 122
WITHOUT INTELLIGENT AIR CONDITIONER SYSTEM : Component Part Location 129
WITHOUT INTELLIGENT AIR CONDITIONER SYSTEM : Component Description 132

WITH INTELLIGENT AIR CONDITIONER SYSTEM 132
WITH INTELLIGENT AIR CONDITIONER SYSTEM : System Diagram 132
WITH INTELLIGENT AIR CONDITIONER SYSTEM : System Description 133
WITH INTELLIGENT AIR CONDITIONER SYSTEM : Component Part Location 138
WITH INTELLIGENT AIR CONDITIONER SYSTEM : Component Description 141

PLASMACLUSTER SYSTEM 142

WITH INTELLIGENT AIR CONDITIONER SYSTEM 142
WITH INTELLIGENT AIR CONDITIONER SYSTEM : System Diagram 142
WITH INTELLIGENT AIR CONDITIONER SYSTEM : System Description 142
WITH INTELLIGENT AIR CONDITIONER SYSTEM : Component Part Location 143
WITH INTELLIGENT AIR CONDITIONER SYSTEM : Component Description 144

MODE DOOR CONTROL SYSTEM 145
System Diagram 145
System Description 145

AIR MIX DOOR CONTROL SYSTEM 147
System Diagram 147
System Description 147

INTAKE DOOR CONTROL SYSTEM 149

WITHOUT INTELLIGENT AIR CONDITIONER SYSTEM 149
WITHOUT INTELLIGENT AIR CONDITIONER SYSTEM : System Diagram 149
WITHOUT INTELLIGENT AIR CONDITIONER SYSTEM : System Description 149

WITH INTELLIGENT AIR CONDITIONER SYSTEM 150
WITH INTELLIGENT AIR CONDITIONER SYSTEM : System Diagram 150
WITH INTELLIGENT AIR CONDITIONER SYSTEM : System Description 150

BLOWER MOTOR CONTROL SYSTEM 152
System Diagram 152
System Description 152

MAGNET CLUTCH CONTROL SYSTEM 154
System Diagram 154
System Description 154

CAN COMMUNICATION SYSTEM 155
System Description 155

DIAGNOSIS SYSTEM (HVAC) 156

WITHOUT INTELLIGENT AIR CONDITIONER SYSTEM 156
WITHOUT INTELLIGENT AIR CONDITIONER SYSTEM : CONSULT-III Function 156

WITH INTELLIGENT AIR CONDITIONER SYSTEM 159
WITH INTELLIGENT AIR CONDITIONER SYSTEM : CONSULT-III Function 159

COMPONENT DIAGNOSIS 164

U1000 CAN COMM CIRCUIT 164
Description 164

DTC Logic 164
Diagnosis Procedure 164

U1010 CONTROL UNIT (CAN) 165
Description 165
DTC Logic 165
Diagnosis Procedure 165

B257B, B257C AMBIENT SENSOR 166
Description 166
DTC Logic 166
Diagnosis Procedure 167
Component Inspection 168

B2578, B2579 IN-VEHICLE SENSOR 169
Description 169
DTC Logic 169
Diagnosis Procedure 170
Component Inspection 171

B2581, B2582 INTAKE SENSOR 172
Description 172
DTC Logic 172
Diagnosis Procedure 172
Component Inspection 173

B262A, B262B, B2657, B2658 GAS SENSOR 175

WITH INTELLIGENT AIR CONDITIONER SYSTEM 175
WITH INTELLIGENT AIR CONDITIONER SYSTEM : Description 175
WITH INTELLIGENT AIR CONDITIONER SYSTEM : DTC Logic 175
WITH INTELLIGENT AIR CONDITIONER SYSTEM : Diagnosis Procedure 176

B2630, B2631 SUNLOAD SENSOR 178
Description 178
DTC Logic 178
Diagnosis Procedure 179
Component Inspection 180

B2632, B2633 AIR MIX DOOR MOTOR (DRIVER SIDE) 181
Description 181
DTC Logic 181
Diagnosis Procedure 182

B2634, B2635 AIR MIX DOOR MOTOR (PASSENGER SIDE) 183
Description 183
DTC Logic 183
Diagnosis Procedure 184

B2636, B2637, B2638, B2639, B2654, B2655 MODE DOOR MOTOR 185
Description 185
DTC Logic 185
Diagnosis Procedure 186

B263D B263E, B263F, B2656 INTAKE DOOR MOTOR 188
Description 188
DTC Logic 188
Diagnosis Procedure 189

POWER SUPPLY AND GROUND CIRCUIT ...191

A/C AUTO AMP. 191
A/C AUTO AMP. : Diagnosis Procedure 191

A/C AUTO AMP. 192
Description 192
Component Function Check 192
Diagnosis Procedure 192

BLOWER MOTOR 193
Description 193
Component Function Check 193
Diagnosis Procedure 193
Component Inspection 196

MAGNET CLUTCH 197
Description 197
Component Function Check 197
Diagnosis Procedure 197

IONIZER 199

WITH INTELLIGENT AIR CONDITIONER SYSTEM 199
WITH INTELLIGENT AIR CONDITIONER SYSTEM : Description 199
WITH INTELLIGENT AIR CONDITIONER SYSTEM : Component Function Check 199
WITH INTELLIGENT AIR CONDITIONER SYSTEM : Diagnosis Procedure 199

ECU DIAGNOSIS 202

A/C AUTO AMP. 202

WITHOUT INTELLIGENT AIR CONDITIONER SYSTEM 202
WITHOUT INTELLIGENT AIR CONDITIONER SYSTEM : Reference Value 202
WITHOUT INTELLIGENT AIR CONDITIONER SYSTEM : Wiring Diagram - AIR CONDITIONER CONTROL SYSTEM - 203
WITHOUT INTELLIGENT AIR CONDITIONER SYSTEM : Fail-Safe 211
WITHOUT INTELLIGENT AIR CONDITIONER SYSTEM : DTC Inspection Priority Chart 212
WITHOUT INTELLIGENT AIR CONDITIONER SYSTEM : DTC Index 212

WITH INTELLIGENT AIR CONDITIONER SYSTEM 213
WITH INTELLIGENT AIR CONDITIONER SYSTEM : Reference Value 213

WITH INTELLIGENT AIR CONDITIONER SYSTEM : Wiring Diagram - AIR CONDITIONER CONTROL SYSTEM - 215
WITH INTELLIGENT AIR CONDITIONER SYSTEM : Fail-Safe 223
WITH INTELLIGENT AIR CONDITIONER SYSTEM : DTC Inspection Priority Chart 224
WITH INTELLIGENT AIR CONDITIONER SYSTEM : DTC Index 224

SYMPTOM DIAGNOSIS 226

AIR CONDITIONER CONTROL 226
Diagnosis Chart By Symptom 226

PLASMACLUSTER SYSTEM DOES NOT OPERATE 227

WITH INTELLIGENT AIR CONDITIONER SYSTEM 227
WITH INTELLIGENT AIR CONDITIONER SYSTEM : Description 227
WITH INTELLIGENT AIR CONDITIONER SYSTEM : Inspection procedure 227

INSUFFICIENT COOLING 228
Description 228
Inspection procedure 228

INSUFFICIENT HEATING 231
Description 231
Inspection procedure 231

NOISE 234
Description 234
Inspection procedure 234

MEMORY FUNCTION DOES NOT OPERATE. 236
Description 236
Inspection procedure 236

PRECAUTION 237

PRECAUTIONS 237
Precaution for Supplemental Restraint System (SRS) "AIR BAG" and "SEAT BELT PRE-TENSIONER" 237
Precaution Necessary for Steering Wheel Rotation after Battery Disconnect 237
Precaution for Procedure without Cowl Top Cover. 238
Precautions For Xenon Headlamp Service 238
Working with HFC-134a (R-134a) 238
General Refrigerant Precaution 239
Refrigerant Connection 239
Service Equipment 241

COMPRESSOR 244
General Precautions 244

FLUORESCENT LEAK DETECTOR 245
General Precautions 245

BASIC INSPECTION

DIAGNOSIS AND REPAIR WORKFLOW

Work Flow

INFOID:0000000003846290

OVERALL SEQUENCE

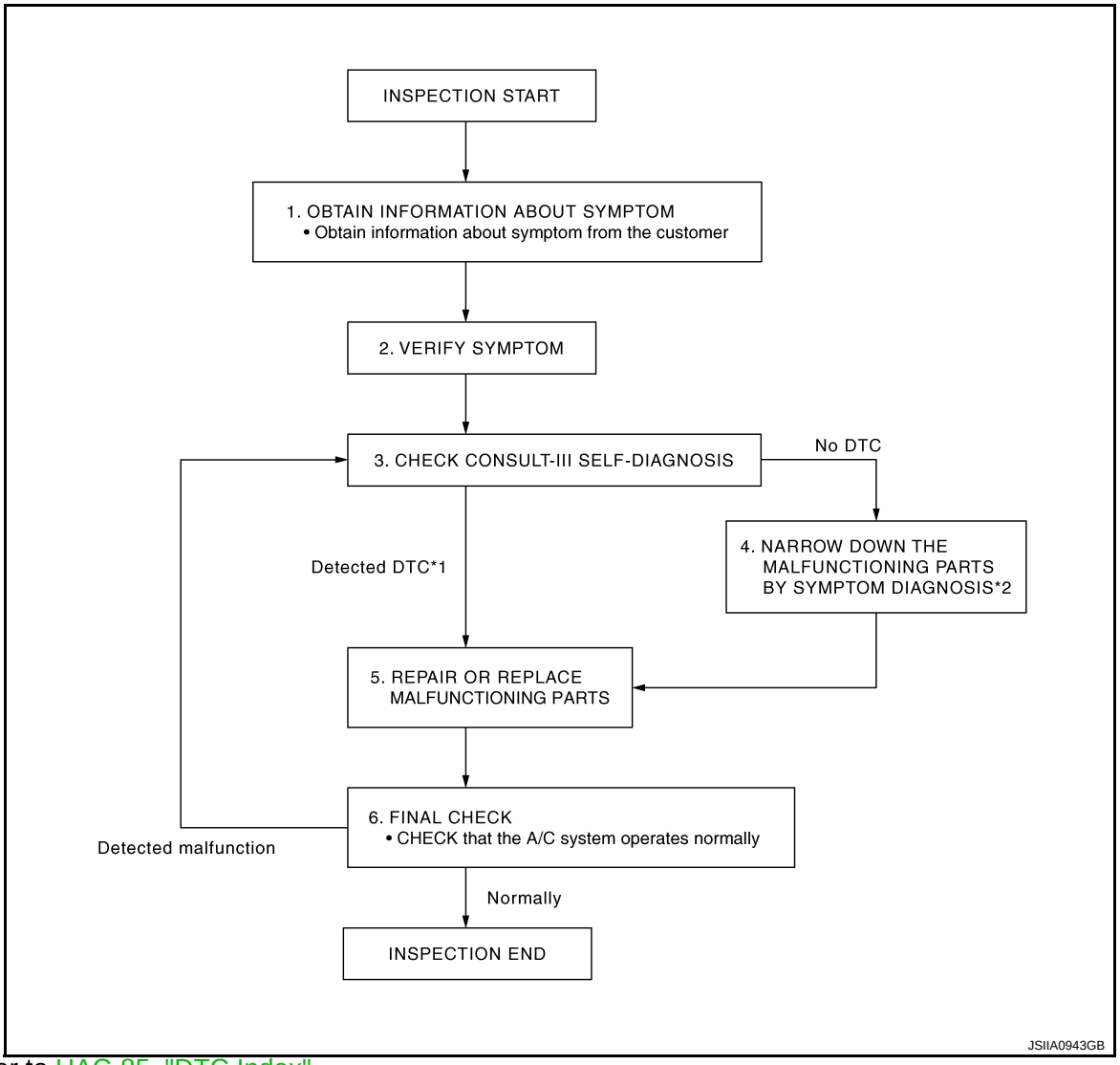

*1: Refer to HAC-85, "DTC Index".
*2: Refer to HAC-87, "Diagnosis Chart By Symptom".

DETAILED FLOW

1. OBTAIN INFORMATION ABOUT SYMPTOM

Interview the customer to obtain as much information as possible about the conditions and environment under which the malfunction occurred.

>> GO TO 2.

2. VERIFY SYMPTOM

Verify the symptom with operational check based on the information obtained from the customer. Refer to HAC-8, "Description & Inspection".

>> GO TO 3.

3. CHECK WITH SELF-DIAGNOSIS FUNCTION OF CONSULT-III

Using CONSULT-III, perform “SELF-DIAGNOSIS RESULTS” of HVAC. Refer to HAC-85, "DTC Index".

Are self-diagnosis results normal?

YES >> GO TO 4.
NO >> GO TO 5.

4. NARROW DOWN THE MALFUNCTIONING PARTS BY SYMPTOM DIAGNOSIS

Perform symptom diagnosis and narrow down the malfunctioning parts. Refer to HAC-87, "Diagnosis Chart By Symptom".

>> GO TO 5.

5. REPAIR OR REPLACE MALFUNCTIONING PARTS

Repair or replace malfunctioning parts.

NOTE:
If DTC is displayed, erase DTC after repairing or replacing malfunctioning parts.

>> GO TO 6.

6. FINAL CHECK

Check that the A/C system operates normally.

Is the inspection result normal?

YES >> INSPECTION END
NO >> GO TO 3.

INSPECTION AND ADJUSTMENT

Description & Inspection

INFOID:0000000003846291

DESCRIPTION

The purpose of the operational check is to check that the individual system operates normally.

Conditions : Engine running at normal operating temperature

INSPECTION PROCEDURE

1. CHECK MEMORY FUNCTION

1. Start the engine.
2. Operate the temperature control switch (driver side) and raise the temperature setting to 32°C (90°F).
3. Press the OFF switch.
4. Turn the ignition switch OFF.
5. Turn the ignition switch ON.
6. Press the AUTO switch.
7. Check that the temperature setting before turning the ignition switch OFF is stored.

Is the inspection result normal?

YES >> GO TO 2.
NO >> Memory function malfunction: HAC-96, "Inspection procedure".

2. CHECK BLOWER MOTOR SPEED

1. Start the engine.
2. Operate the fan control dial. Check that the fan speed changes. Check the operation for all fan speeds.
3. Set the fan speed to speed 7.

Is the inspection result normal?

YES >> GO TO 3.
NO >> Blower motor system malfunction: HAC-68, "Diagnosis Procedure".

3. CHECK DISCHARGE AIR

1. Press the MODE switch and the DEF switch.
2. Each position indicator should change shape.
3. Confirm that discharge air comes out according to the air distribution table. Refer to HAC-17, "System Description".

Discharge air flow						
Mode position indication	Condition	Air outlet/distribution				
		VENT		FOOT		DEF
		Front	Rear	Front	Rear	
	DUAL switch: OFF Rear ventilator : OPEN	89%	11%	—	—	—
		46%	17%	27%	10%	—
		14%	16%	34%	14%	22%
		12%	16%	27%	13%	32%
		11%	12%	—	—	77%

JPIIA0877GB

NOTE:
Confirm that the compressor clutch is engaged (sound or visual inspection) and the intake door position is at the FRE when DEF is selected.

Is the inspection result normal?

YES >> GO TO 4.
NO >> Mode door system malfunction: HAC-61, "Diagnosis Procedure".

4. CHECK INTAKE AIR

1. Press the REC switch. REC indicator is turned ON.
2. Press the FRE switch. FRE indicator is turned ON.
3. Listen for the intake door position change. (Slight change of blower sound can be heard.)

NOTE:
Confirm that the compressor clutch is engaged (sound or visual inspection) and the intake door position is at the FRE when the DEF is selected.

Is the inspection result normal?

YES >> GO TO 5.
NO >> Intake door system malfunction: HAC-64, "Diagnosis Procedure".

5. CHECK A/C SWITCH

1. Press the A/C switch.
2. The A/C switch indicator is turned ON.
   Confirm that the compressor clutch engages (sound or visual inspection).

Is the inspection result normal?

YES >> GO TO 6.
NO >> Magnet clutch system malfunction: HAC-72, "Diagnosis Procedure".

6. CHECK WITH TEMPERATURE SETTING LOWERED

1. Operate the compressor.
2. Operate the temperature control switch (driver side) and lower the temperature setting to 18°C (60°F).
3. Check that the cool air blows from the outlets.

Is the inspection result normal?

YES >> GO TO 7.
NO >> Insufficient cooling: HAC-88, "Inspection procedure".

7. CHECK WITH TEMPERATURE SETTING RAISED

1. Operate the temperature control switch (driver side) and raise the temperature setting to 32°C (90°F) after warming up the engine.
2. Check that the warm air blows from the outlets.

Is the inspection result normal?

YES >> GO TO 8.
NO >> Insufficient heating: HAC-91, "Inspection procedure".

8. CHECK LEFT AND RIGHT VENTILATION TEMPERATURE SEPARATELY CONTROL SYSTEM FUNCTION

1. Press the DUAL switch, and then check that “DUAL” is shown on the display.
2. Operate the temperature control switch (driver side). Check that the discharge air temperature (driver side) changes.
3. Operate the temperature control switch (passenger side). Check that the discharge air temperature (passenger side) changes.
4. Press the DUAL switch, and then check that the temperature setting (LH/RH) is unified to the driver side temperature setting.

Is the inspection result normal?

YES >> GO TO 9.
NO >> Refer to HAC-87, "Diagnosis Chart By Symptom" and perform the appropriate diagnosis.

9. CHECK AUTO MODE

1. Press the AUTO switch, and then check that “AUTO” is shown on the display.
2. Operate the temperature control switch (driver side). Check that the fan speed or outlet changes (the discharge air temperature or fan speed varies depending on the ambient temperature, in-vehicle temperature, and temperature setting).

Is the inspection result normal?

YES >> GO TO 10.
NO >> Refer to HAC-87, "Diagnosis Chart By Symptom" and perform the appropriate diagnosis.

10. CHECK AUTO MODE

1. Press the AUTO switch, and then check that “AUTO” is shown on the display.
2. Operate the temperature control switch (driver side). Check that the fan speed or outlet changes (the discharge air temperature or fan speed varies depending on the ambient temperature, in-vehicle temperature, and temperature setting).

Is the inspection result normal?

YES >> INSPECTION END
NO >> Refer to HAC-87, "Diagnosis Chart By Symptom" and perform the appropriate diagnosis.

Temperature Setting Trimmer

INFOID:0000000003846292

DESCRIPTION

If the temperature felt by the customer is different than the air flow temperature controlled by the temperature setting, the A/C auto amp. control temperature can be adjusted to compensate for the temperature setting.

HOW TO SET

Using CONSULT-III, perform “TEMP SET CORRECT” on “WORK SUPPORT” of HVAC.

Work support items	Display (°F)	Display (°C)
TEMP SET CORRECT	6	3.0
	5	2.5
	4	2.0
	3	1.5
	2	1.0
	1	0.5
	0 (initial status)	0 (initial status)
	–1	–0.5
	–2	–1.0
	–3	–1.5
	–4	–2.0
	–5	–2.5
	–6	–3.0

NOTE:

- When the temperature setting is set to 25.0°C (77°F) and –3.0°C (–6°F), the temperature controlled by A/C auto amp. is 25.0°C (77°F) –3.0°C (6°F) = 22.0°C (71°F) and the temperature becomes lower than the temperature setting.
- When the battery cable is disconnected from the negative terminal or when the battery voltage becomes 10 V or less, trimmer operation is canceled. Temperature set becomes that of initial condition.

Foot Position Setting Trimmer

INFOID:0000000003846293

DESCRIPTION

In the FOOT mode, the air blowing to the DEF can be turned ON/OFF.

HOW TO SET

Using CONSULT-III, perform “BLOW SET” on “WORK SUPPORT” of HVAC.

Work support items	Display	DEF door position	
		Auto control	Manual control
BLOW SET	Mode 1	OPEN	CLOSE
	Mode 2 (initial status)	OPEN	OPEN
	Mode 3	CLOSE	OPEN
	Mode 4	CLOSE	CLOSE

NOTE:
When the battery cable is disconnected from the negative terminal or when the battery voltage becomes 10 V or less, trimmer operation is cancelled. Wind distribution rate set becomes that of initial condition.

Inlet Port Memory Function (FRE)

INFOID:0000000003846294

DESCRIPTION

- If the ignition switch is turned to the OFF position while the FRE switch is set to ON (fresh air intake), “Perform the memory” or “Do not perform the memory” of the FRE switch ON (fresh air intake) condition can be selected.
- If “Perform the memory” was set, the FRE switch will be ON (fresh air intake) when turning the ignition switch to the ON position again.
- If “Do not perform the memory” was set, the air inlets will be controlled automatically when turning the ignition switch to the ON position again.

HOW TO SET

Using CONSULT-III, perform “FRE MEMORY SET” on “WORK SUPPORT” of HVAC.

Work support items	Display	Setting
FRE MEMORY SET	WITHOUT (initial status)	Perform the memory of manual FRE
	WITH	Do not perform the memory of manual FRE (auto control)

NOTE:
When the battery cable is disconnected from the negative terminal or when the battery voltage becomes 10 V or less, the setting of the FRE switch memory function may be cancelled.

Inlet Port Memory Function (REC)

INFOID:0000000003846295

DESCRIPTION

- If the ignition switch is turned to the OFF position while the REC switch is set to ON (recirculation), “Perform the memory” or “Do not perform the memory” of the REC switch ON (recirculation) condition can be selected.
- If “Perform the memory” was set, the REC switch will be ON (recirculation) when turning the ignition switch to the ON position again.
- If “Do not perform the memory” was set, the air inlets will be controlled automatically when turning the ignition switch to the ON position again.

HOW TO SET

Using CONSULT-III, perform “REC MEMORY SET” on “WORK SUPPORT” of HVAC.

Work support items	Display	Setting
REC MEMORY SET	WITHOUT	Perform the memory of manual REC
	WITH (initial status)	Do not perform the memory of manual REC (auto control)

NOTE:
When the battery cable is disconnected from the negative terminal or when the battery voltage becomes 10 V or less, the setting of the REC switch memory function may be cancelled.

FUNCTION DIAGNOSIS

COMPRESSOR CONTROL FUNCTION

Description

INFOID:0000000003846298

PRINCIPLE OF OPERATION

Compressor is not activated.

Functional circuit diagram

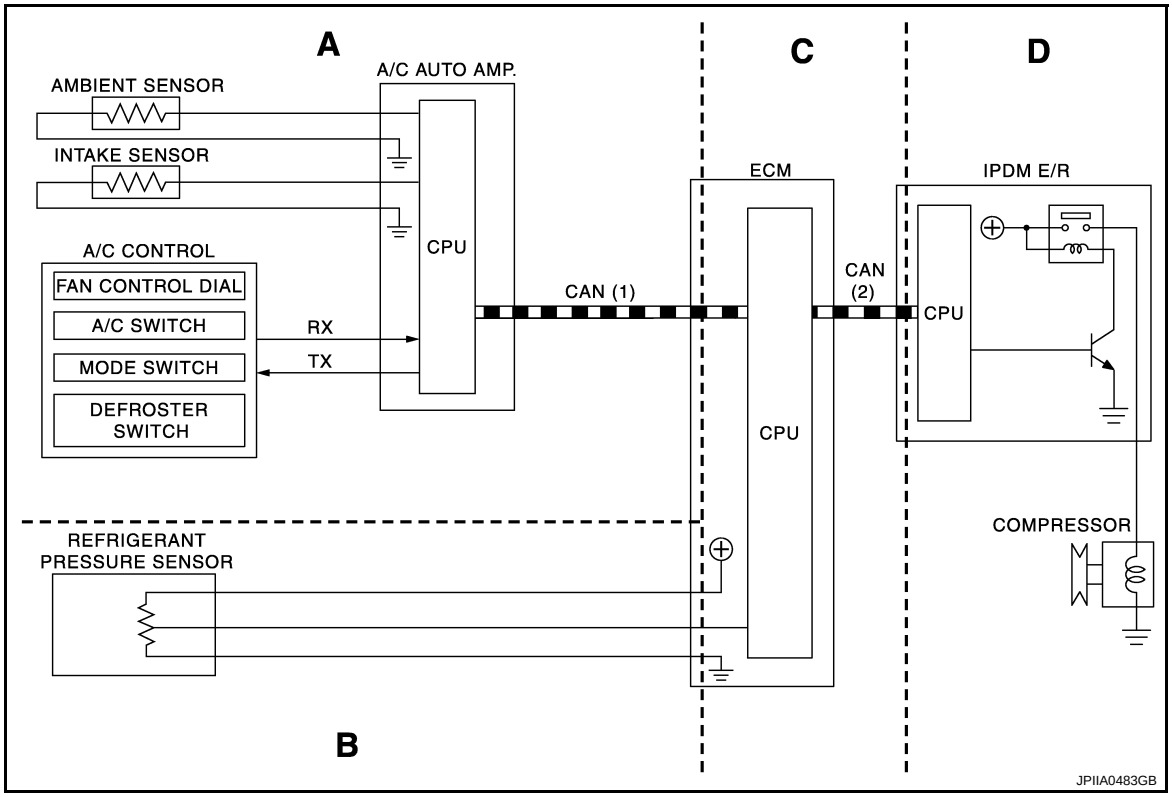

CAN (1) : A/C switch signal
: Blower fan motor switch signal

RX : A/C switch signal
: Fan ON signal
: Defroster signal

CAN (2) : A/C Compressor request signal

Functional initial inspection chart

Control unit	Diagnosis Item		Location			
			A	B	C	D
A/C auto amp.	"HVAC"	Self-diagnosis	Yes			
		Data monitor	Yes			
		Active test	Yes			Yes
ECM	"ENGINE"	Self-diagnosis (CAN system diagnosis)			Yes	
		Data monitor		Yes	Yes	
IPDM E/R	"IPDM E/R"	Self-diagnosis (CAN system diagnosis)				Yes
		Data monitor			Yes	
	Auto active test					Yes

Fail-Safe

INFOID:0000000003901219

FAIL-SAFE FUNCTION

If a communication error exists between the A/C auto amp. and A/C control for 30 seconds or longer, air conditioner is controlled under the following conditions:

Compressor	**: ON**
Air outlet	**: AUTO**
Air inlet	**: FRE (Fresh)**
Blower fan speed	**: AUTO**
Set temperature	**: Setting before communication error occurs**

Component Part Location

INFOID:0000000003846299

ENGINE COMPARTMENT

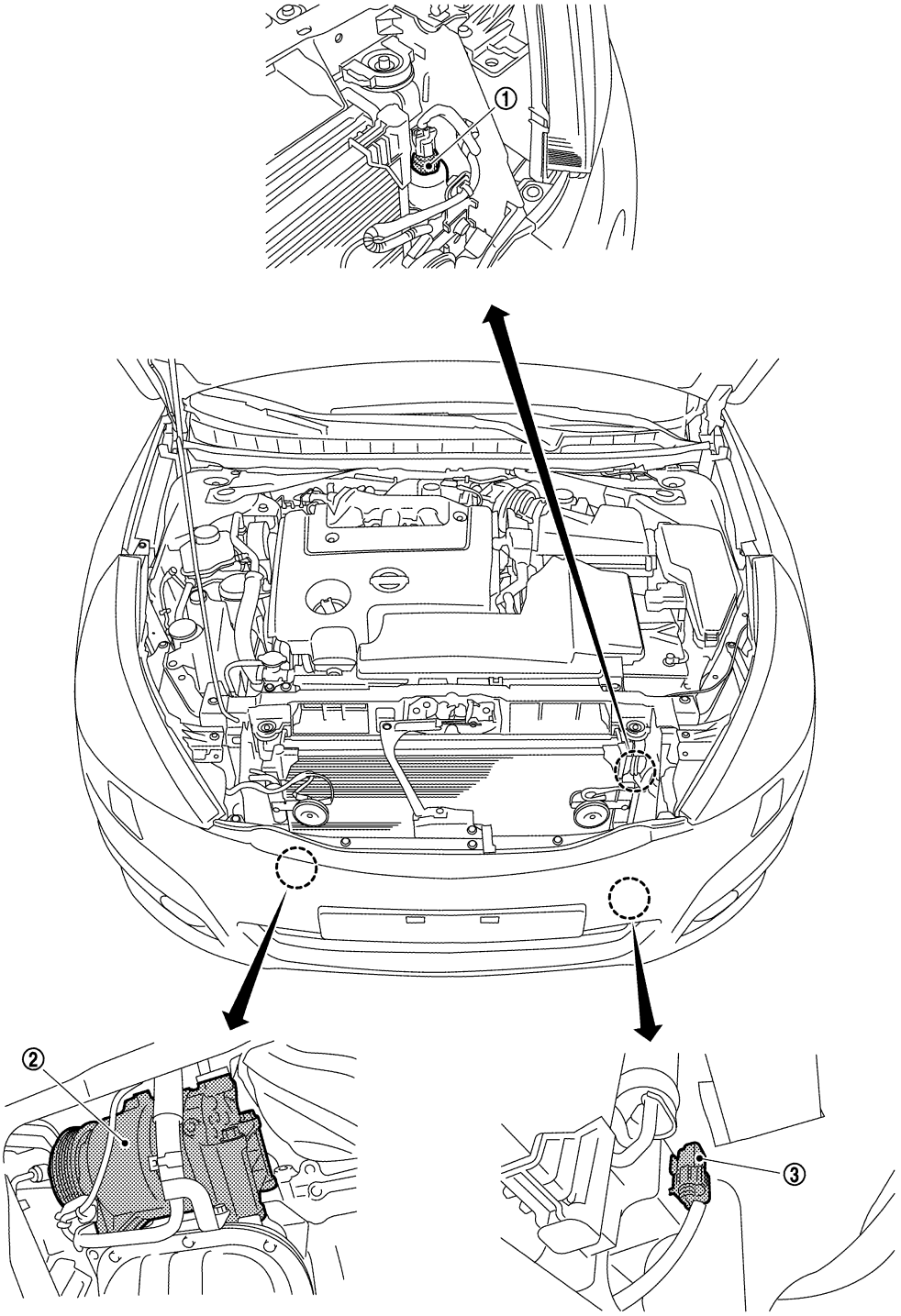

JPIIA0992ZZ

1. Refrigerant pressure sensor
2. Compressor (magnet clutch)
3. Ambient sensor

PASSENGER COMPARTMENT

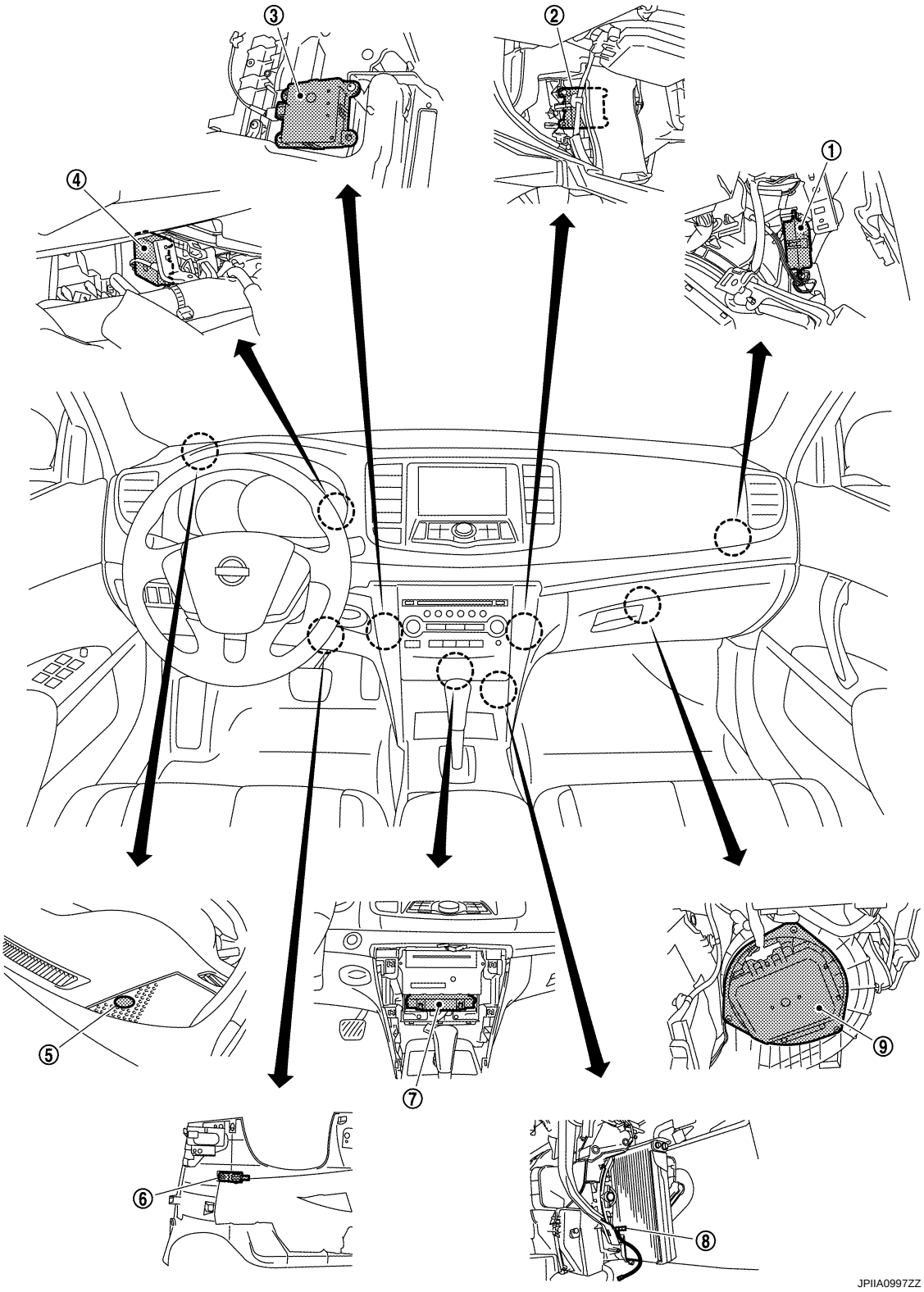

1. Intake door motor
2. Air mix door motor (passenger side)
3. Air mix door motor (driver side)
4. Mode door motor
5. Sunload sensor
6. In-vehicle sensor
7. A/C auto amp.
8. Intake sensor
9. Blower motor

Component's Role

INFOID:0000000003846300

Component	Description
Refrigerant pressure sensor	EC-348, "Description"
Compressor	HAC-72, "Description"
Ambient sensor	HAC-44, "Description"
Intake door motor	HAC-63, "Description"
Air mix door motor (driver side)	HAC-56, "Description"
Air mix door motor (passenger side)	HAC-58, "Description"
Mode door motor	HAC-60, "Description"
Sunload sensor	HAC-53, "Description"
In-vehicle sensor	HAC-47, "Description"
A/C auto amp.	HAC-67, "Description"
Intake sensor	HAC-50, "Description"
Blower motor	HAC-68, "Description"

AUTOMATIC AIR CONDITIONER SYSTEM

System Diagram

INFOID:0000000003846301

CONTROL SYSTEM

The control system consists of input sensors, switches, the A/C auto amp. (microcomputer) and outputs. The relationship of these components is as shown in the figure below:

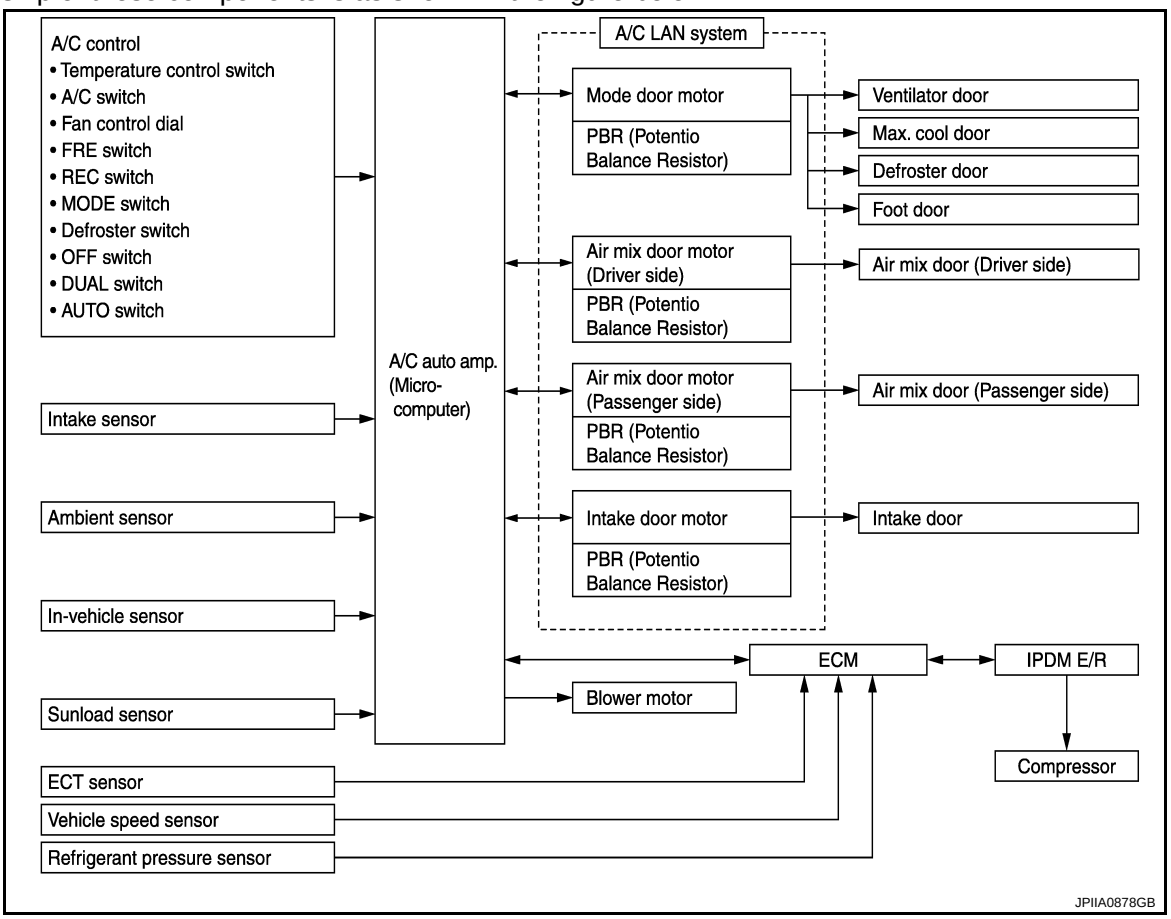

System Description

INFOID:0000000003846302

CONTROL OPERATION

Display

The operation status of the system is displayed on the screen.

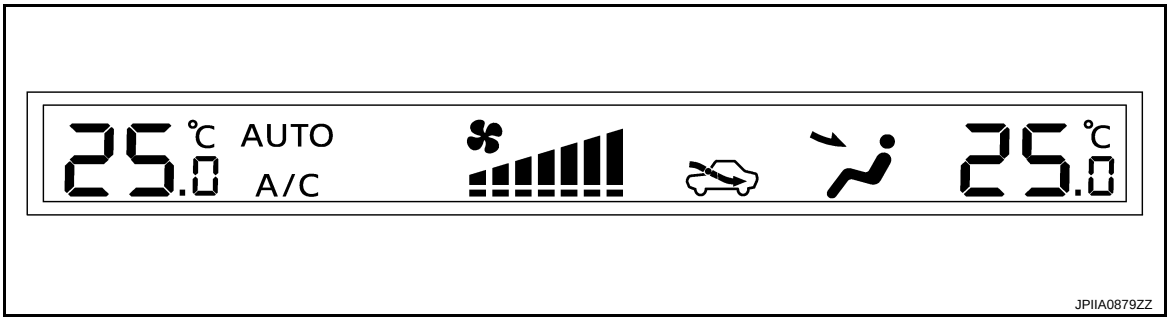

A/C Control

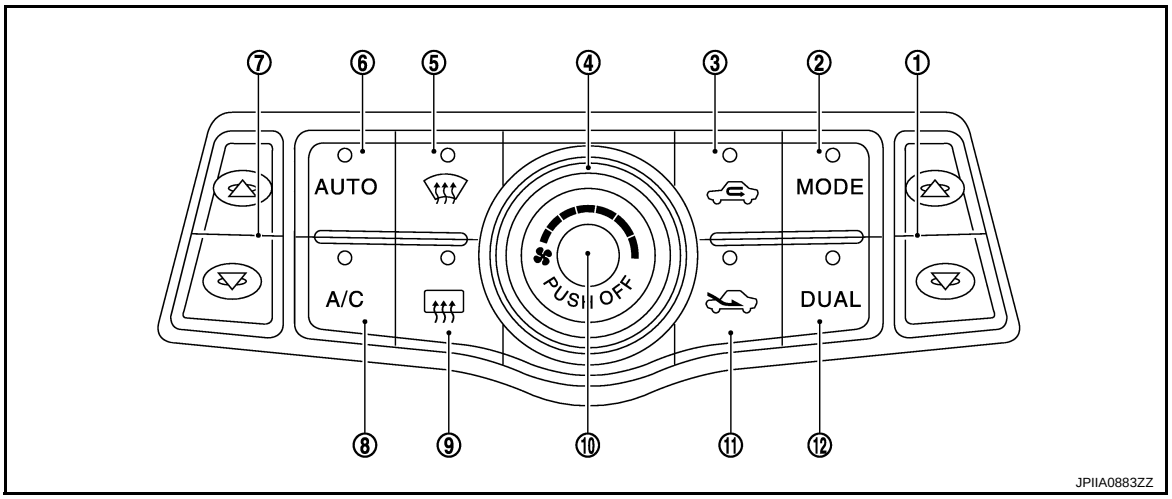

1.	Temperature control switch (passenger side)	2.	MODE switch	3.	Recirculation (REC) switch
4.	Fan control dial	5.	Defroster (DEF) switch	6.	AUTO switch
7.	Temperature control switch (driver side)	8.	A/C switch	9.	Rear window defogger switch
10.	OFF switch	11.	Fresh (FRE) switch	12.	DUAL switch

MODE Switch
The air discharge outlets are controlled with this switch.

Temperature Control Switch (Driver Side)
The set temperature is increased or decreased with this switch.

Temperature Control Switch (Passenger Side)
- The set temperature is increased or decreased with this switch.
- When the temperature control switch is pressed, DUAL switch indicator is turned ON.

AUTO Switch
- The compressor, intake door, air mix doors, mode doors and blower speed are automatically controlled so that the in-vehicle temperature will reach, and be maintained at the set temperature selected by the operator.
- When pressing the AUTO switch, air inlet, air outlet, fan speed, and discharge air temperature are automatically controlled.

Defroster (DEF) Switch
Mode doors are set to the defrost position with this switch. Also, intake door is set to the outside air position, and compressor turns ON.

A/C Switch
Compressor turns ON or OFF with this switch.
(Pressing the A/C switch when the A/C switch is ON turns OFF the A/C switch and compressor.)

Fan Control Dial
The blower speed is manually controlled with this dial. Seven speeds are available for manual control (as shown on the display screen).

OFF Switch
Compressor and blower turn OFF, air inlet sets to FRE, and mode the position is set to foot position.

Rear Window Defogger Switch
When indicator is ON, rear window is defogged.

Recirculation (REC) Switch
- When REC switch is ON, REC switch indicator turns ON, and air inlet is fixed to REC.
- When REC switch is pressed for approximately 1.5 seconds or longer, REC and FRE switch indicators blink twice. Then, automatic control mode is entered. Inlet status is displayed even during automatic control.
- When FRE switch is turned ON, REC switch is automatically turned OFF (fixed to FRE mode). REC mode can be re-entered by pressing REC switch again.

Fresh (FRE)Switch

- When FRE switch is ON, FRE switch indicator turns ON, and air inlet is fixed to FRE.
- When FRE switch is pressed for approximately 1.5 seconds or longer, REC and FRE switch indicators blink twice. Then, automatic control mode is entered. Inlet status is displayed even during automatic control.
- When REC switch is turned ON, FRE switch is automatically turned OFF (fixed to REC mode). FRE mode can be re-entered by pressing FRE switch again.

DUAL Switch

- When the DUAL switch indicator is ON, the driver side and passenger side, temperature can each be set independently.
- When the DUAL switch indicator is OFF, the driver side setting temperature is applied to both sides.

DISCHARGE AIR FLOW

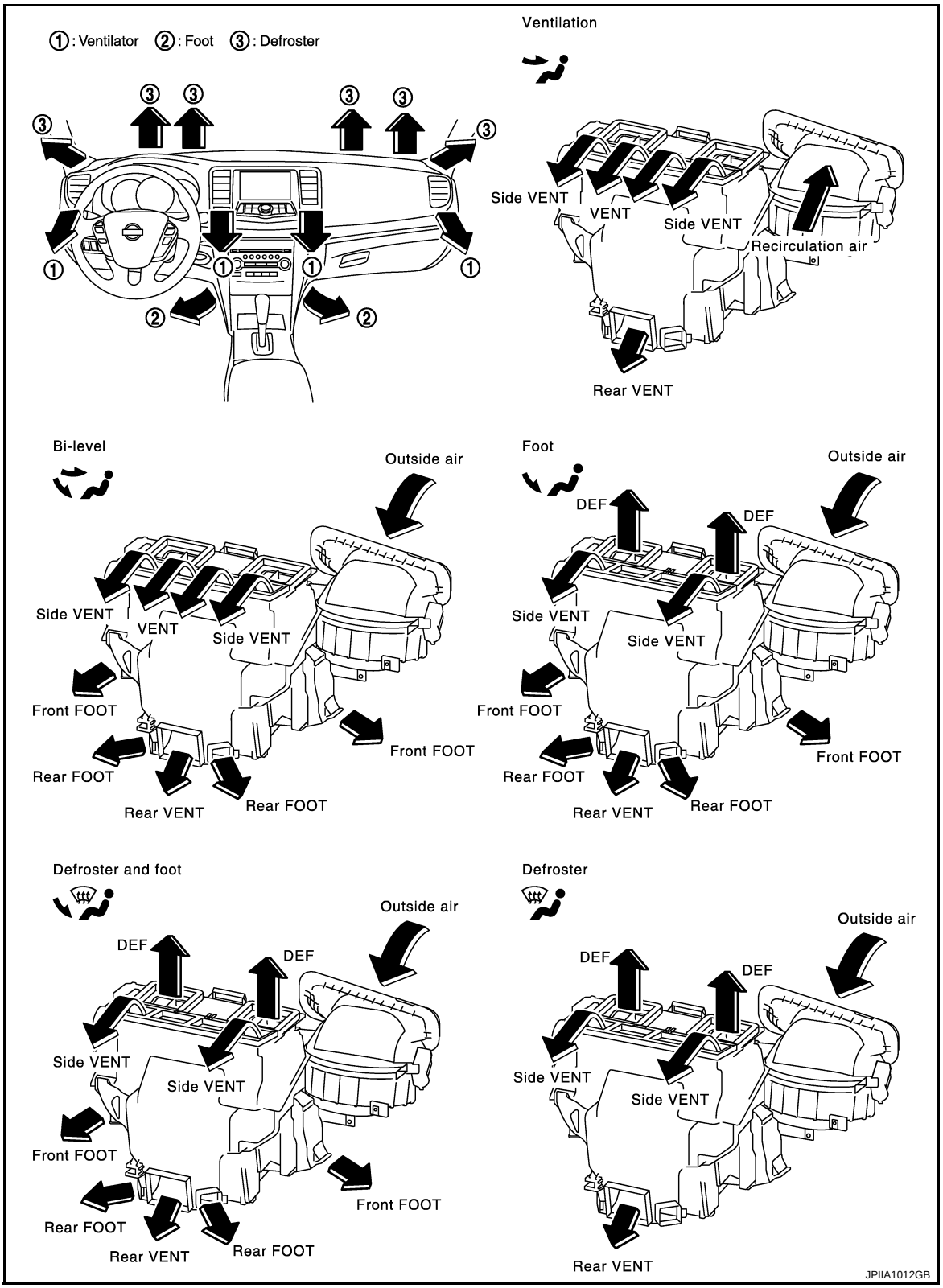

AIR DISTRIBUTION

Discharge air flow						
Mode position indication	Condition	Air outlet/distribution				
		VENT		FOOT		DEF
		Front	Rear	Front	Rear	
	DUAL switch: OFF Rear ventilator : OPEN	89%	11%	—	—	—
		46%	17%	27%	10%	—
		14%	16%	34%	14%	22%
		12%	16%	27%	13%	32%
		11%	12%	—	—	77%

JPIIA0877GB

SWITCHES AND THEIR CONTROL FUNCTION

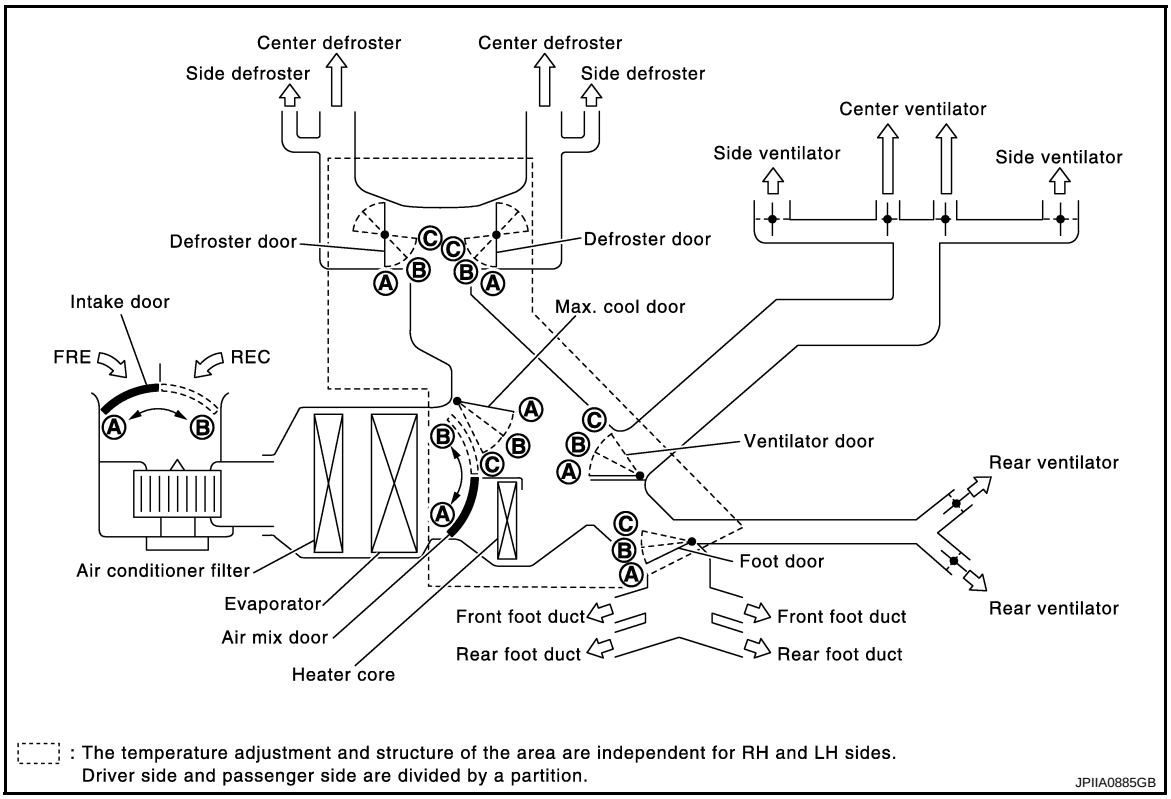

Position or switch / Door	DUAL switch	MODE switch				DEF switch		AUTO switch	Intake switch		Temperature control switch(Driver side)			Temperature control switch(Passenger side)			OFF switch
	DUAL	VENT	B/L	FOOT	D/F	ON	OFF	AUTO	REC	FRE							
		MODE															
											18°C (60°F)	⇔	32°C (90°F)	18°C (60°F)	⇔	32°C (90°F)	
Ventilator door	—	Ⓐ	Ⓑ	Ⓒ	Ⓒ	Ⓒ	—	AUTO	—		—			—			Ⓒ
Max.cool door	—	Ⓐ	Ⓑ	Ⓑ	Ⓑ	Ⓒ			—								Ⓑ
Defroster door	—	Ⓐ	Ⓐ	Ⓑ	Ⓑ	Ⓒ			—								Ⓑ
Foot door	—	Ⓐ	Ⓑ	Ⓒ	Ⓑ	Ⓐ			—		—			—			Ⓒ
Intake door	—	—				Ⓑ			Ⓐ*	Ⓑ*	—			—			Ⓑ
Air mix door (Driver side)	—	—				—			—		Ⓐ	AUTO	Ⓑ	—			—
Air mix door (Passenger side)	ON	—				—			—		—			Ⓐ	AUTO	Ⓑ	
	OFF	—				—			—		Ⓐ	AUTO	Ⓑ	—			

*: Inlet status is displayed by indicator when activating automatic control.

JSIIA1186GB

AIR CONDITIONER LAN CONTROL SYSTEM

The LAN (Local Area Network) system consists of the A/C auto amp., the mode door motor, the air mix door motors and the intake door motor.
A configuration of these components is as shown in the figure below.

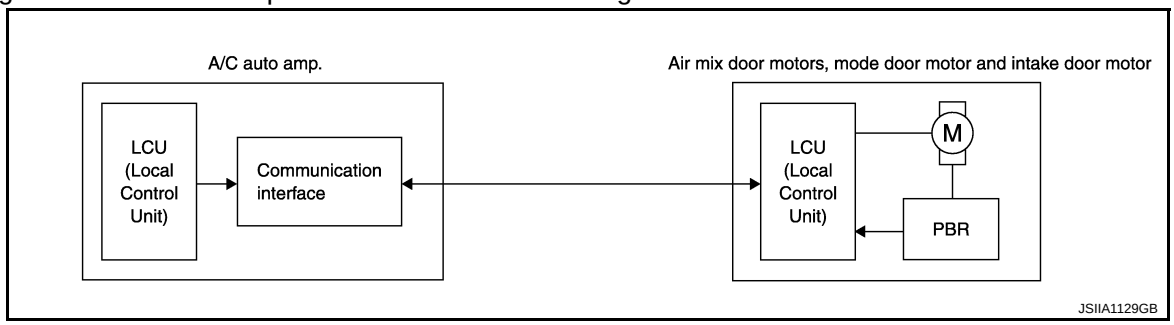

SYSTEM CONSTRUCTION

A small network exists between the A/C auto amp., the mode door motor, the air mix door motor and the intake door motor. The A/C auto amp. and motors are connected by data transmission lines and motor power supply lines. The LAN network is built through the ground circuits of each door motor.
Addresses, motor opening angle signals, motor stop signals and error checking messages are all transmitted through the data transmission lines connecting the A/C auto amp. and each door motor.
The following functions are contained in LCUs built into the mode door motor, the air mix door motors and the intake door motor.

- Address
- Motor opening angle signals
- Data transmission
- Motor stop and drive decision
- Opening angle sensor (PBR function)
- Comparison

- Decision (A/C auto amp. indicated value and motor opening angle comparison)

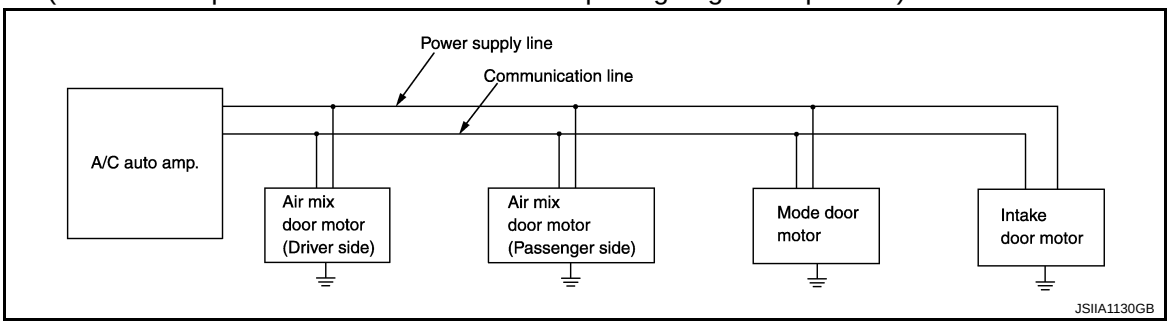

Operation

The A/C auto amp. receives data from each of the sensors. The A/C auto amp. sends mode door, the air mix door and the intake door opening angle data to the mode door motor LCU, the air mix door motor LCUs and the intake door motor LCU.

The mode door motor, the air mix door motors and the intake door motor read their respective signals according to the address signal. Opening angle indication signals received from the A/C auto amp. and each of the motor position sensors is compared by the LCUs in each door motor with the existing decision and opening angles. Next, HOT/COLD, DEF/VENT, OPEN/SHUT or FRE/REC operation is selected. The new selection data is returned to the A/C auto amp.

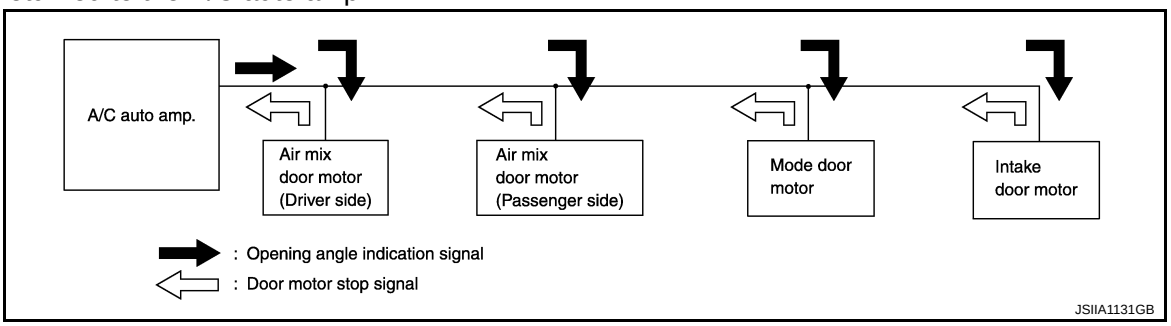

Transmission Data and Transmission Order

A/C auto amp. data is transmitted consecutively to each of the door motors following the form as shown in the figure below.

START:
- Initial compulsory signal is sent to each of the door motors.

ADDRESS:
- Data sent from the A/C auto amp. is selected according to data-based decisions made by the mode door motor, the air mix door motors and the intake door motor.
- If the addresses are identical, the opening angle data and error check signals are received by the door motor LCUs. The LCUs then make the appropriate error decision. If the opening angle data has no error, door control begins.
- If an error exists, the received data is rejected and the corrected data received. Finally, door control is based upon the corrected opening angle data.

OPENING ANGLE:
- Data that shows the indicated door opening angle of each door motor.

ERROR CHECK:
- In this procedure, transmitted and received data is checked for errors. Error data is then compiled. The error check prevents corrupted data from being used by the mode door motor, the air mix door motors and the intake door motor. Error data can be related to the following symptoms.
- Malfunction of electrical frequency
- Poor electrical connections
- Signal leakage from transmission lines
- Signal level fluctuation

STOP SIGNAL:

- At the end of each transmission, a stop operation, in-operation, or internal malfunction message is delivered to the A/C auto amp. This completes one data transmission and control cycle.

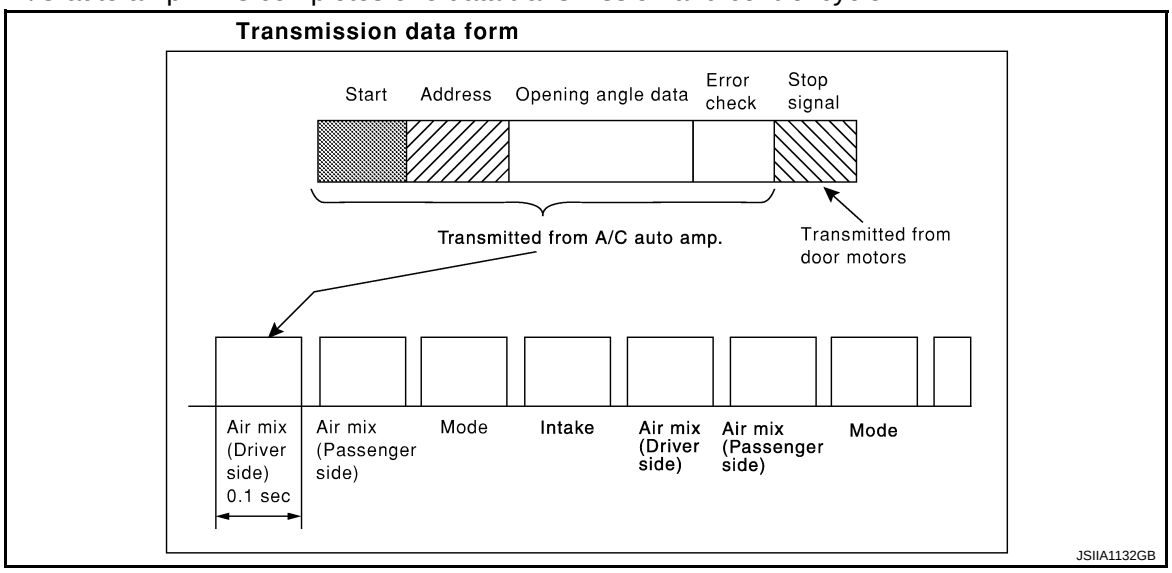

Component Part Location

INFOID:0000000003846303

ENGINE COMPARTMENT

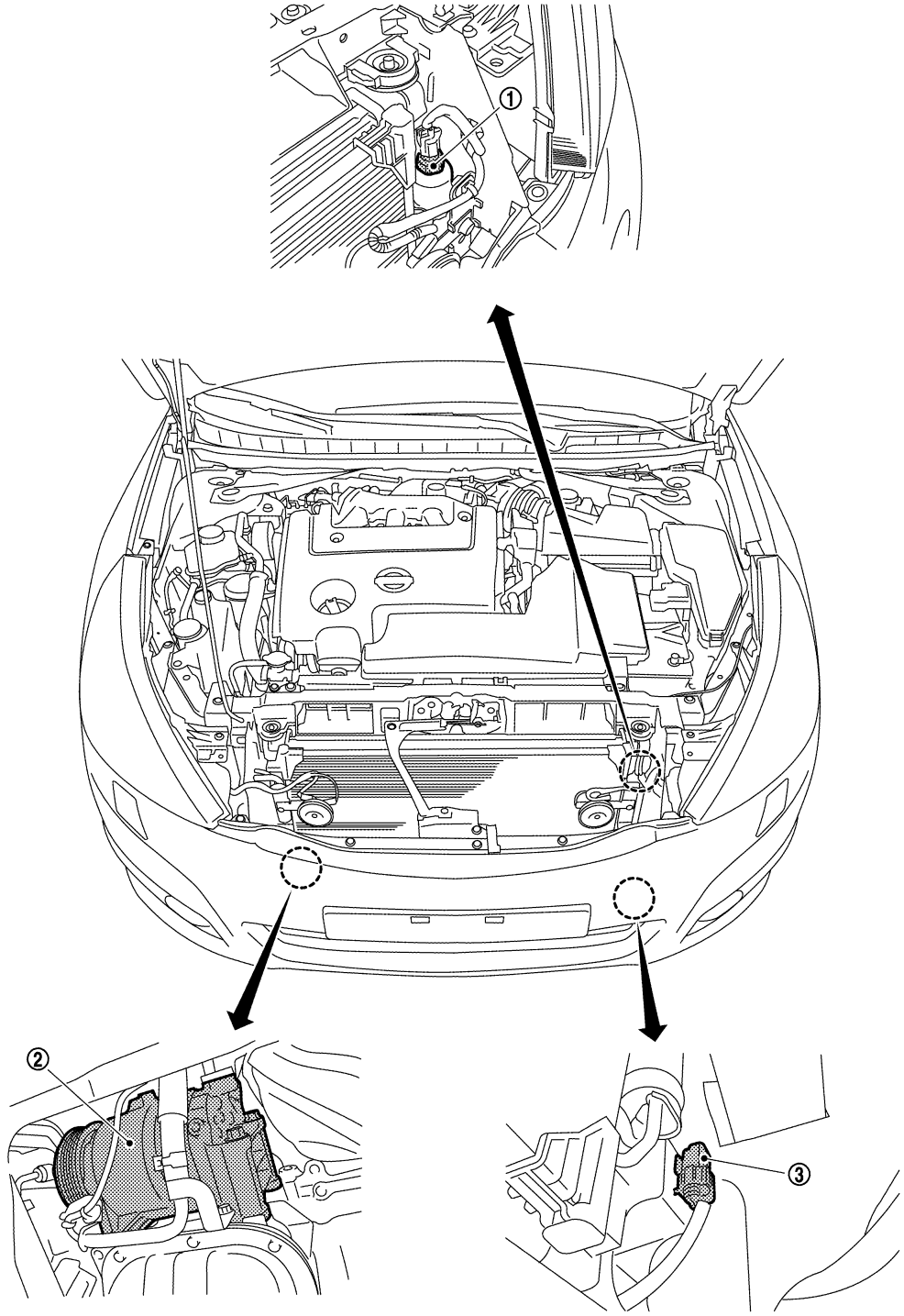

JPIIA0992ZZ

1. Refrigerant pressure sensor
2. Compressor (magnet clutch)
3. Ambient sensor

PASSENGER COMPARTMENT

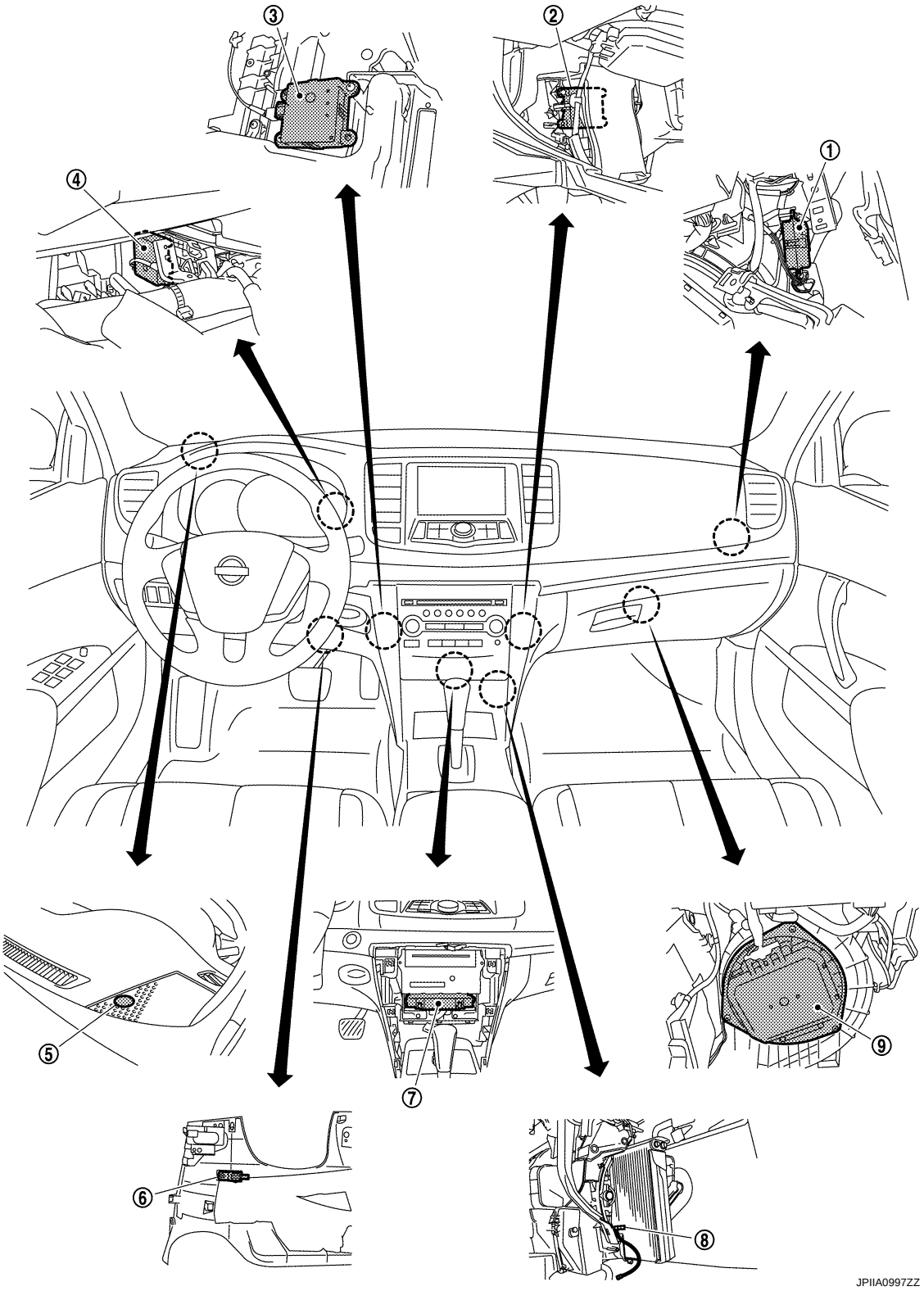

1. Intake door motor
2. Air mix door motor (passenger side)
3. Air mix door motor (driver side)
4. Mode door motor
5. Sunload sensor
6. In-vehicle sensor
7. A/C auto amp.
8. Intake sensor
9. Blower motor

Component Description

INFOID:0000000003846304

Component	Description
Refrigerant pressure sensor	EC-348, "Description"
Compressor	HAC-72, "Description"
Ambient sensor	HAC-44, "Description"
Intake door motor	HAC-63, "Description"
Air mix door motor (driver side)	HAC-56, "Description"
Air mix door motor (passenger side)	HAC-58, "Description"
Mode door motor	HAC-60, "Description"
Sunload sensor	HAC-53, "Description"
In-vehicle sensor	HAC-47, "Description"
A/C auto amp.	HAC-67, "Description"
Intake sensor	HAC-50, "Description"
Blower motor	HAC-68, "Description"

MODE DOOR CONTROL SYSTEM

System Diagram

INFOID:0000000003846309

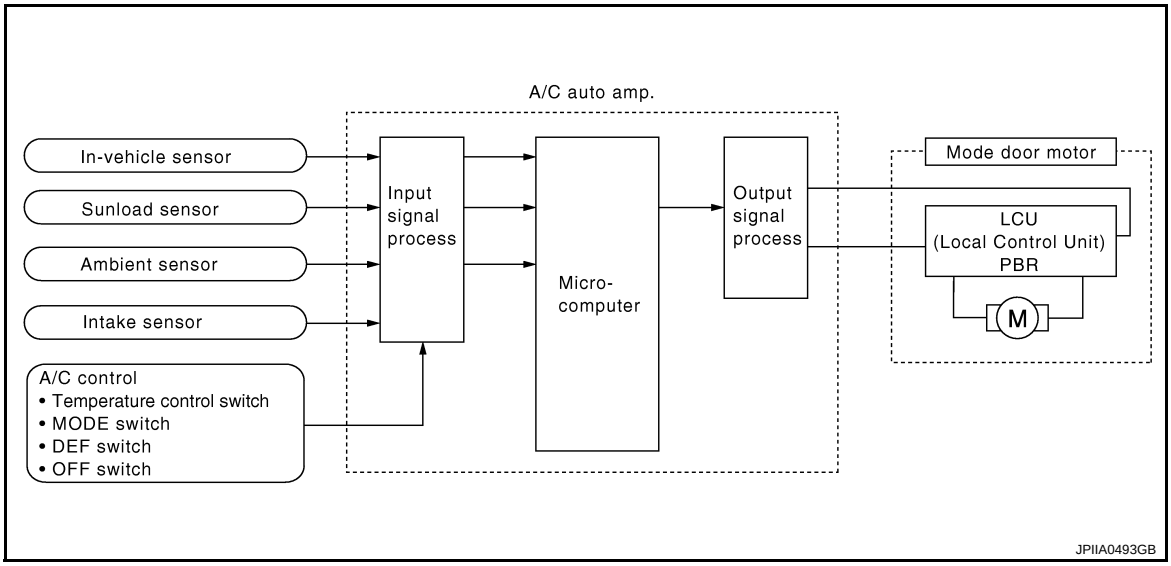

System Description

INFOID:0000000003846310

The mode door is automatically controlled by the temperature setting, ambient temperature, in-vehicle temperature, intake temperature and amount of sunload.

SYSTEM OPERATION

- The A/C auto amp. receives data from each of the sensors.
- The A/C auto amp. sends the air mix door, the mode door and the intake door opening angle data to the air mix door motor LCUs, the mode door motor LCU and the intake door motor LCU.
- The air mix door motors, the mode door motor and the intake door motor read their respective signals according to the address signal. Opening angle indication signals received from the A/C auto amp. and each of the motor position sensors are compared by the LCUs in each door motor with the existing decision and opening angles.
- Next, HOT/COLD, DEF/VENT, OPEN/SHUT or FRE/REC operations is selected. The newly selected data is returned to the A/C auto amp.

Door Motor Circuit

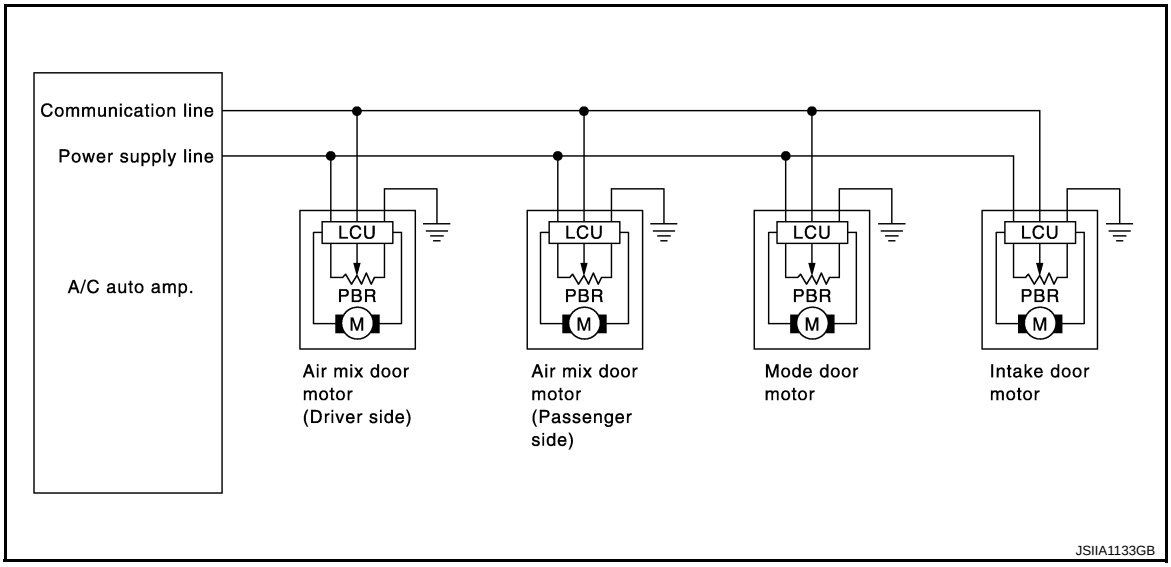

Mode Door Control Specification

Mode position can be selected manually by pressing the MODE switch or the DEF switch on the A/C control. This the setting of a mode position. Pressing the AUTO switch allows automatic control by the A/C auto amp. During the automatic control of a mode position, a mode door position (VENT, B/L, FOOT, or D/F) is selected based on a target the air mix door opening angle and sunload depending on the temperature calculated by the A/C auto amp. In addition, the D/F is selected to prevent windshield fogging only when ambient temperature is extremely low with mode position the FOOT.

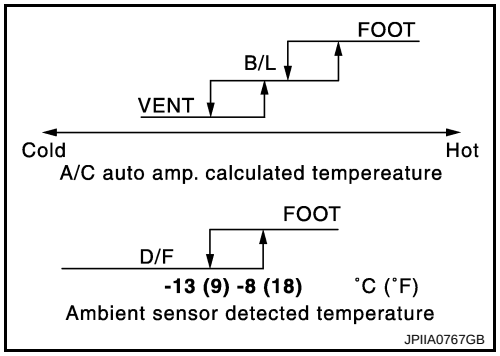

AIR MIX DOOR CONTROL SYSTEM

System Diagram

INFOID:0000000003846311

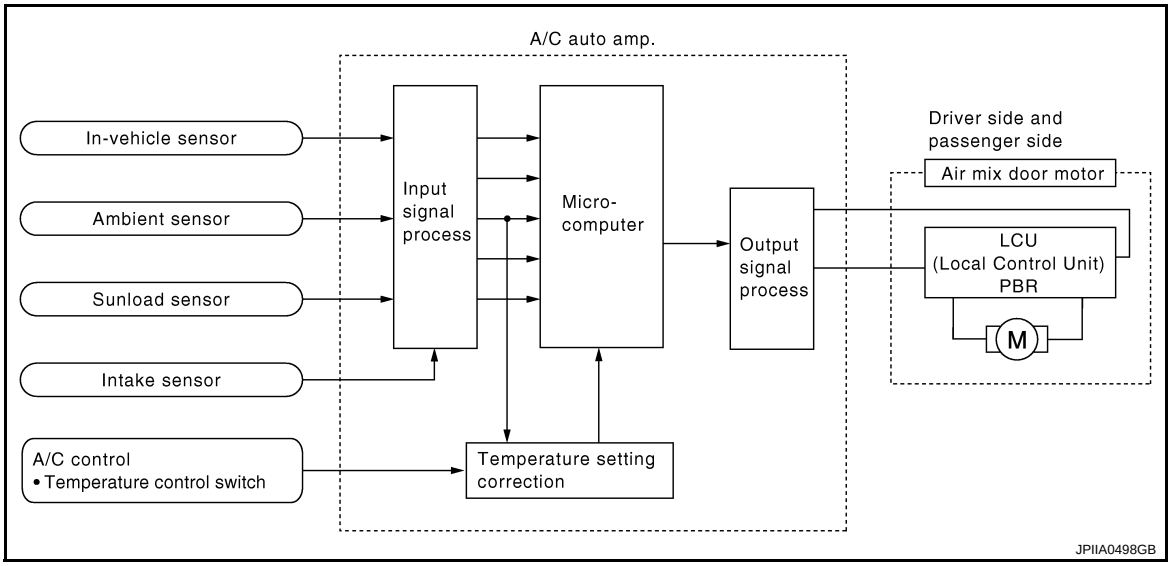

System Description

INFOID:0000000003846312

The air mix doors are automatically controlled so that in-vehicle temperature is maintained at a predetermined value by the temperature setting, ambient temperature, intake temperature and amount of sunload.

SYSTEM OPERATION

- The A/C auto amp. receives data from each of the sensors.
- The A/C auto amp. sends air mix door, the mode door and the intake door opening angle data to the air mix door motor LCUs, the mode door motor LCU and the intake door motor LCU.
- The air mix door motors, the mode door motor and the intake door motor read their respective signals according to the address signal. Opening angle indication signals received from the A/C auto amp. and each of the motor position sensors are compared by the LCUs in each door motor with the existing decision and opening angles.
- Next, HOT/COLD, DEF/VENT, OPEN/SHUT or FRE/REC operation is selected. The newly selected data is returned to the A/C auto amp.

Door Motor Circuit

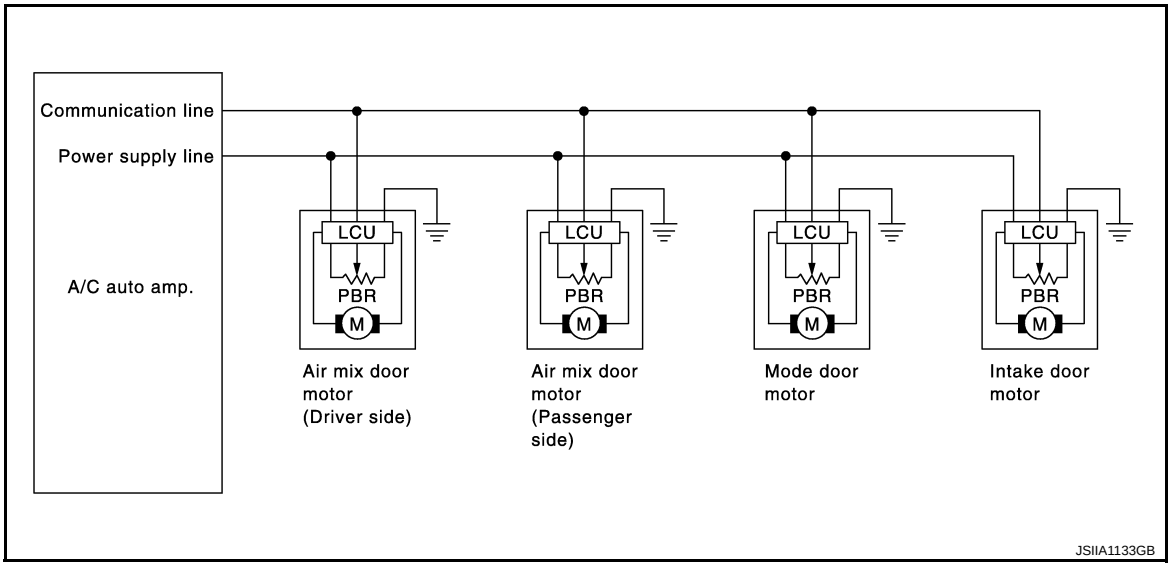

Air Mix Door Control Specification

When ignition switch is ON, the A/C auto amp. continuously and automatically controls temperatures regardless of air conditioner operational condition. When setting a target temperature with the temperature control switch, the A/C auto amp. corrects the set temperature and decides a target air mix door opening angle. The A/C auto amp. controls air mix door according to the target air mix door opening angle and current air mix door opening angle, keeping an optimum air mix door opening angle. When the temperature is set at 18°C (60°F), air mix door is set on full cold, and when the temperature is set at 32°C (90°F), it is set to full hot.

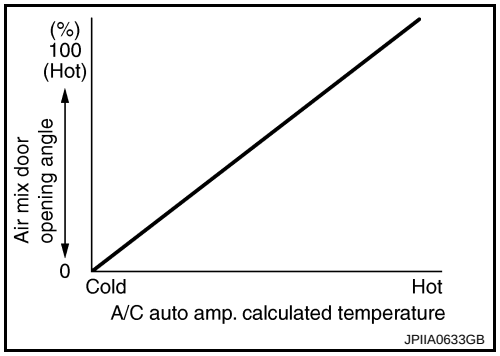

INTAKE DOOR CONTROL SYSTEM

System Diagram

INFOID:0000000003846313

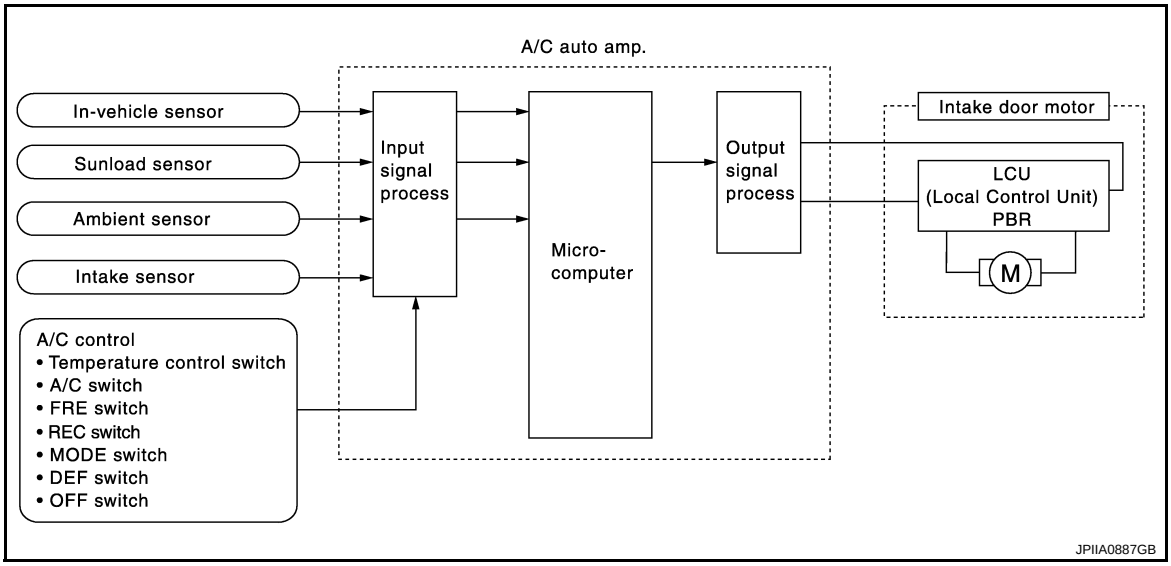

System Description

INFOID:0000000003846314

The intake door is automatically controlled by the temperature setting, ambient temperature, in-vehicle temperature, intake temperature, amount of sunload and ON/OFF operation of the compressor.

SYSTEM OPERATION

The intake door control judges intake door position based on the ambient temperature, the intake air temperature and the in-vehicle temperature. When the DEF or OFF switches are pressed, the A/C auto amp. sets the intake door to the FRE position.

Door Motor Circuit

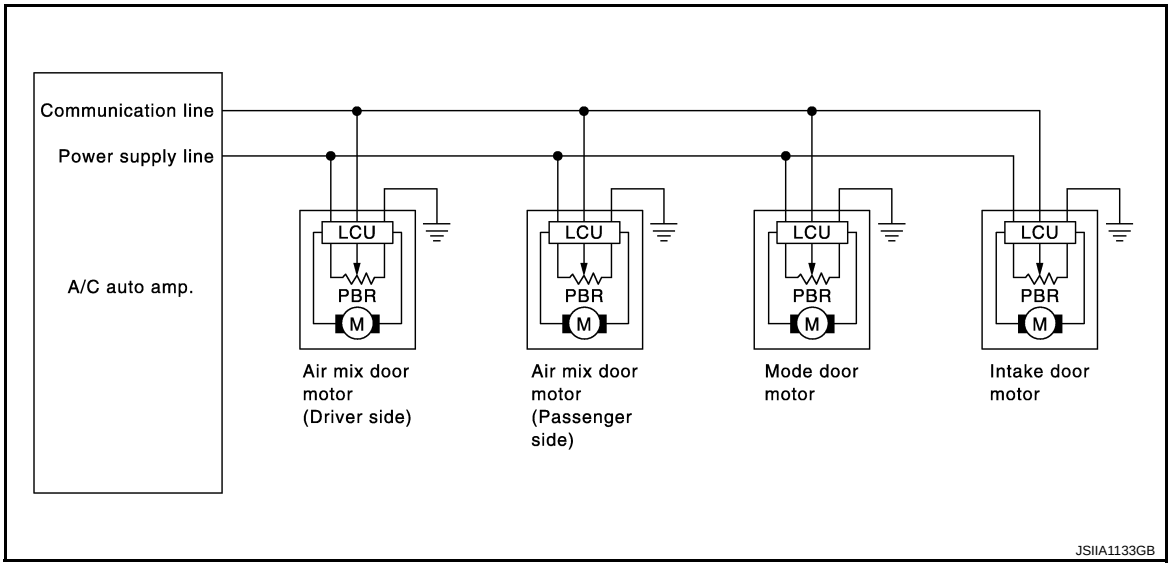

Intake Door Control Specification

- Intake door position is basically set to the FRE when the FRE indicator is ON or DEF switch is ON.
- Intake door position is basically set to the REC when the REC indicator is ON.
- The intake door automatic control selects the FRE, the 20% FRE, or the REC depending on the target air mix door opening angle, based on in-vehicle temperature, ambient temperature, and sunload.

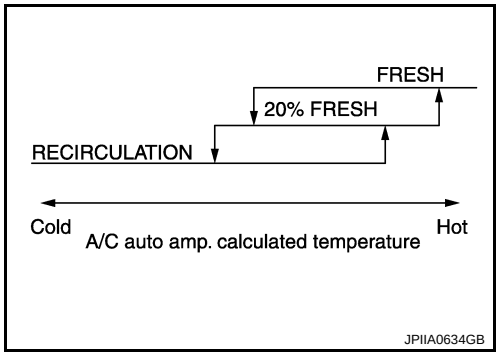

BLOWER MOTOR CONTROL SYSTEM

System Diagram

INFOID:0000000003846315

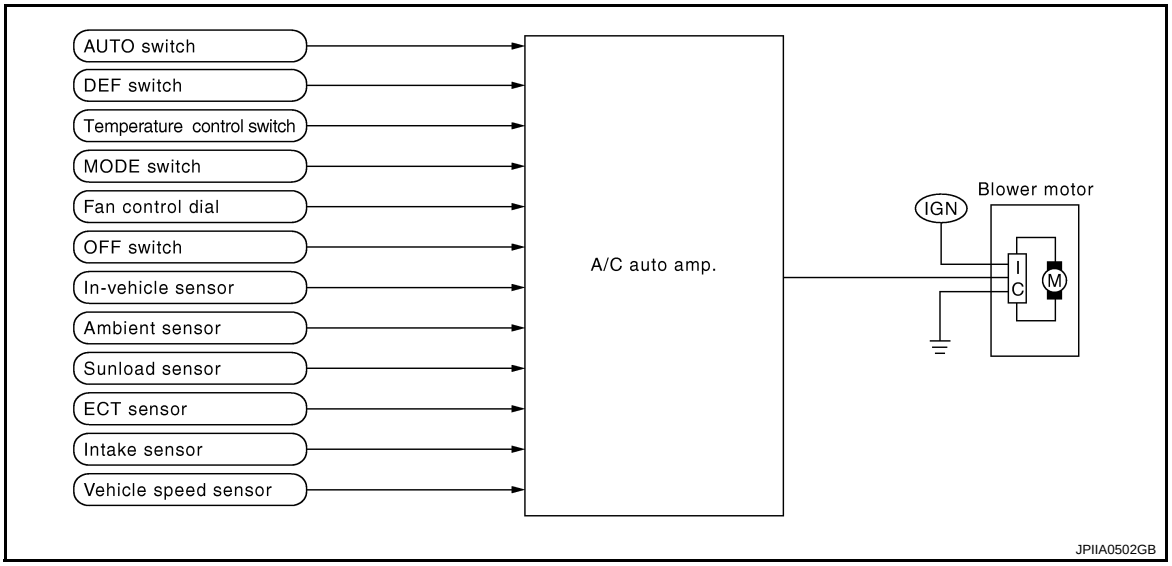

System Description

INFOID:0000000003846316

Blower speed is automatically controlled by the temperature setting, ambient temperature, in-vehicle temperature, intake temperature, amount of sunload and air mix door position.
By pressing the AUTO switch, the blower motor starts to gradually increase air flow volume.
When engine coolant temperature is low, the blower motor operation is delayed to prevent cool air from flowing.

SYSTEM OPERATION

System Operation

- For air flow, the manual selection (1-7) with the fan control dial has priority.
- If the AUTO switch is pressed or if the DEF switch is pressed while in the OFF condition, it changes to the automatic control by A/C auto amp.
- When increasing the air flow, it changes the duty ratio of the blower motor drive signal to prevent the air flow from suddenly increasing.
- There are the following types of air flow control: starting air flow control, starting air flow control at low coolant temperature, starting air flow control at high in-vehicle temperature, and air flow control at actuator operation in addition to manual control, normal automatic air flow control.

Normal Automatic Air Flow Control

- When the target temperature is set by the temperature control switch of A/C control, the A/C auto amp. performs the calculation and decides the target according to the signal from each sensor.
- The A/C auto amp. changes the duty ratio of blower motor drive signal and controls the air flow continuously so that the air flow becomes the target air flow.
- The minimum air flow will change according to the sunload when the air discharge outlet is VENT or B/L.

Fan Speed Control Specification

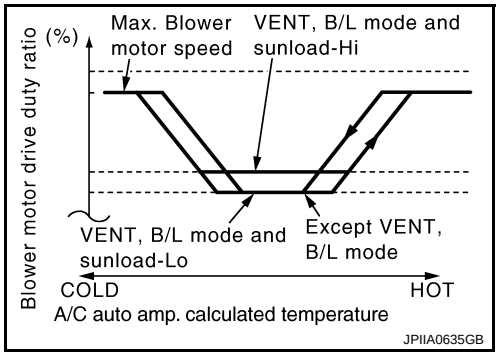

Starting Air Flow Control

- When starting the automatic control of air flow, the system gradually increases the duty ratio of the blower motor drive signal to prevent too much air from blowing.
- The time period from when the air flow changes from LO to HI is approximately 8 seconds.
- It becomes the starting air flow control at low coolant temperature according to the calculation result of the A/C auto amp. and engine coolant temperature [approximately 56°C (133°F) or less] during the automatic air flow control.
- Do not perform the starting air flow control when the air discharge outlet is set to DEF.

Starting Fan Speed Control

Start up from COLD SOAK Condition (Automatic mode)

In cold start up condition where the engine coolant temperature is below 56°C (133°F), the blower does not operate for a short period of time (up to 150 seconds). The exact start delay time varies depending on the ambient temperature and engine coolant temperature.

In the most extreme case (very low ambient temperature) the blower start delay is 150 seconds as described above. After this delay, the blower will operate at low speed until the engine coolant temperature rises above 56°C (133°F), and then the blower speed increases to the objective speed.

Start up from usual or HOT SOAK Condition (Automatic mode)

The blower will begin operation momentarily after the AUTO switch is pressed. The blower speed rises gradually to the objective speed over a time period of 3 seconds or less (actual time depends on the objective blower speed).

MAGNET CLUTCH CONTROL SYSTEM

System Diagram

INFOID:0000000003846317

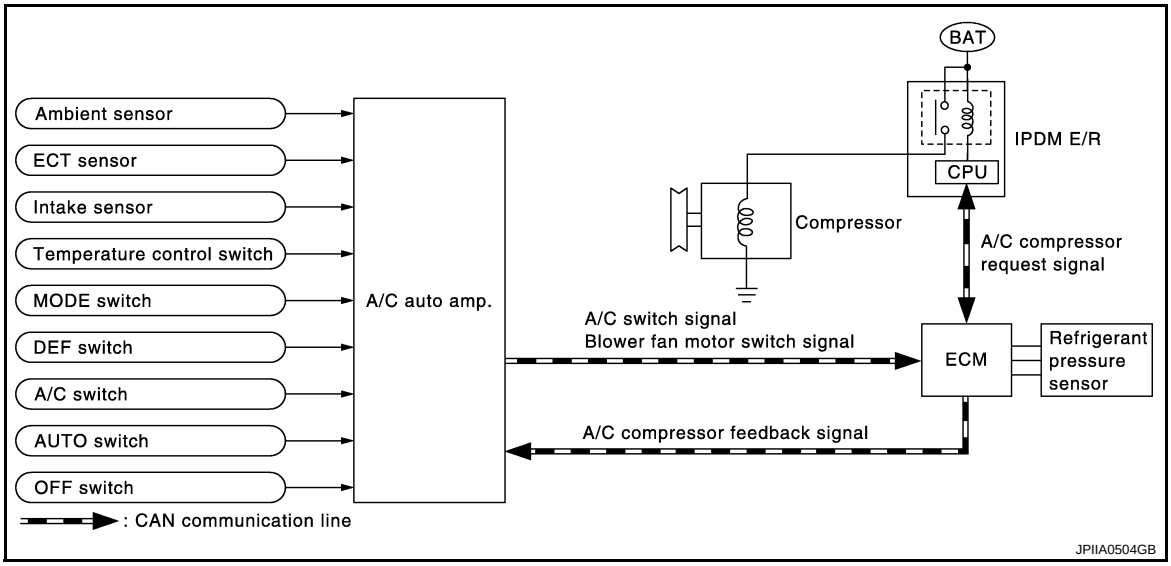

System Description

INFOID:0000000003846318

The A/C auto amp. controls compressor operation by ambient temperature, intake air temperature and signal from ECM.

SYSTEM OPERATION

When the A/C switch, the AUTO switch, or the DEF switch is pressed, A/C auto amp. transmit the A/C switch signal and blower fan motor switch signal to the ECM, via CAN communication.
ECM judges whether compressor can be turned ON, based on each sensor status (refrigerant-pressure sensor signal, throttle angle, etc.). If the ECM judges that the compressor can be turned ON, it sends A/C compressor request signal to the IPDM E/R, via CAN communication.
Upon receipt of A/C compressor request signal from the ECM, the IPDM E/R turns the A/C relay ON to operate the compressor.
When sending A/C compressor request signal to the IPDM E/R via CAN communication line, the ECM simultaneously sends A/C compressor feedback signal to A/C auto amp. via CAN communication line.
The ECM sends A/C compressor feedback signal to A/C auto amp., then, uses input A/C compressor feedback signal to control air inlet.

Compressor Protection Control

The ECM makes the A/C relay turn OFF and stops the compressor when pressure on the high-pressure side detected by the refrigerant pressure sensor is over approximately 3,119 kPa (31.19bar, 31.8 kg/cm^2, 452 psi), or below approximately 118 kPa (1.18bar, 1.2 kg/cm^2, 17 psi).

Low Temperature Protection Control

Turn the A/C relay to OFF and stop the compressor by the signal from the A/C auto amp according to the evaporator passing air temperature detected by the intake sensor and the ambient temperature detected by the ambient sensor.

CAN COMMUNICATION SYSTEM

System Description

INFOID:0000000003846319

CAN (Controller Area Network) is a serial communication line for real time application. It is an on-vehicle multiplex communication line with high data communication speed and excellent error detection ability. Many electronic control units are equipped onto each vehicle, and each control unit shares information and links with other control units during operation (not independent). In CAN communication, control units are connected with 2 communication lines (CAN-H line, CAN-L line) allowing a high rate of information transmission with less wiring. Each control unit transmits/receives data but selectively reads required data only. For details, refer to LAN-22, "CAN System Specification Chart".

DIAGNOSIS SYSTEM (HVAC)

CONSULT-III Function

INFOID:0000000003846320

CONSULT-III can display each diagnosis item using the diagnosis test modes shown as per the following.

CONSULT-III application items

Diagnosis mode	Description
ECU Identification	Displays the A/C auto amp. number.
Self Diagnostic Result	Displays the diagnosis results judged by A/C auto amp.
Data Monitor	Displays A/C auto amp. input/output data in real time.
Active Test	The signals used to activate each device are forcibly supplied from A/C auto amp.
Work Support	Changes the setting for each system function. • Temperature setting trimmer • Inlet port memory function (FRE) • Inlet port memory function (REC) • Foot position setting trimmer

SELF DIAGNOSTIC RESULT

Refer to HAC-85, "DTC Index".

Display Item List

DTC	Items (CONSULT-III screen terms)	Diagnostic item is detected when...	Possible cause
U1000	CAN COMM CIRCUIT	When A/C auto amp. is not transmitting or receiving CAN communication signal for 2 or more seconds.	CAN communication system
U1010	CONTROL UNIT (CAN)	When detecting error during the initial diagnosis of CAN controller of A/C auto amp.	A/C auto amp.
B257B	AMB TEMP SEN (SHORT)	Detected temperature at ambient sensor –44°C (–47°F) or less	• Ambient sensor • A/C auto amp. • Harness and connector (Ambient sensor circuit is open, or there is a short in the circuit)
B257C	AMB TEMP SEN (OPEN)	Detected temperature at ambient sensor 100°C (212°F) or more	
B2578	IN CAR SENSOR (OUT OF RANGE [LOW])	Detected temperature at in-vehicle sensor –44°C (–47°F) or less	• In-vehicle sensor • A/C auto amp. • Harness and connector (In-vehicle sensor circuit is open, or there is a short in the circuit)
B2579	IN CAR SENSOR (OUT OF RANGE [HI])	Detected temperature at in-vehicle sensor 100°C (212°F) or more	
B2581	EVAP TEMP SEN (SHORT)	Detected temperature at intake sensor –33°C (–27°F) or less	• Intake sensor • A/C auto amp. • Harness and connector (Intake sensor circuit is open, or there is a short in the circuit)
B2582	EVAP TEMP SEN (OPEN)	Detected temperature at intake sensor 69°C (156°F) or more	
B2630*	SUNLOAD SEN (SHORT)	Detected calorie at sunload sensor 64.7 w/m^2 (30 kcal/m^2·h) or less	• Sunload sensor • A/C auto amp. • Harness and connector (Sunload sensor circuit is open, or there is a short in the circuit)
B2631*	SUNLOAD SEN (OPEN)	Detected calorie at sunload sensor 2832 w/m^2 (1304 kcal/m^2·h) or more	
B2632	DR AIRMIX ACTR (SHORT)	Air mix door PBR (driver side) position 5% or less	• Air mix door motor (driver side) • A/C auto amp. • Harness and connector (CAN communication line is open or shorted) (Air mix door motor is open or shorted)
B2633	DR AIRMIX ACTR (OPEN)	Air mix door PBR (driver side) position 95% or more	

DTC	Items (CONSULT-III screen terms)	Diagnostic item is detected when...	Possible cause
B2634	PASS AIRMIX ACTR (SHORT)	Air mix door PBR (passenger side) position 5% or less	• Air mix door motor (passenger side) • A/C auto amp. • Harness and connector (CAN communication line is open or shorted) (Air mix door motor is open or shorted)
B2635	PASS AIRMIX ACTR (OPEN)	Air mix door PBR (passenger side) position 95% or more	
B2636	DR VENT DOOR FAIL	When the malfunctioning door position is detected at VENT position	• Mode door motor • A/C auto amp. • Harness and connector (CAN communication line is open or shorted) (Mode door motor is open or shorted)
B2637	DR B/L DOOR FAIL	When the malfunctioning door position is detected at B/L position	
B2638	DR D/F1 DOOR FAIL	When the malfunctioning door position is detected at FOOT position	
B2639	DR DEF DOOR FAIL	When the malfunctioning door position is detected at DEF position	
B263D	FRE DOOR FAIL	When the malfunctioning intake door position is detected at FRE position	• Intake door motor • A/C auto amp. • Harness and connector (CAN communication line is open or shorted) (Intake door motor is open or shorted)
B263E	20P FRE DOOR FAIL	When the malfunctioning intake door position is detected at 20% FRE position	
B263F	REC DOOR FAIL	When the malfunctioning intake door position is detected at REC position	
B2654	D/F2 DOOR FAIL	When the malfunctioning door position is detected at D/F position	• Mode door motor • A/C auto amp. • Harness and connector (CAN communication line is open or shorted) (Mode door motor is open or shorted)
B2655	B/L2 DOOR FAIL	When the malfunctioning door position is detected at B/L2 position	
B2656	BTC FRE DOOR FAIL	When the malfunctioning intake door position is detected	• Intake door motor • A/C auto amp. • Harness and connector (CAN communication line is open or shorted) (Intake door motor is open or shorted)

*: Perform self-diagnosis under sunshine. When performing indoors, aim a light (more than 60 W) at sunload sensor, otherwise self-diagnosis indicates even though the sunload sensor is functioning normally.

DATA MONITOR

Display item list

Monitor item [Unit]		Description
COMP REQ SIG	[On/Off]	Displays A/C switch ON/OFF status transmitted to other units via CAN communication
FAN REQ SIG	[On/Off]	Displays blower switch ON/OFF status transmitted to other units via CAN communication
AMB TEMP SEN	[°C]	Ambient sensor value converted from ambient sensor signal received from ambient sensor
IN-VEH TEMP	[°C]	In-vehicle sensor value converted from in-vehicle sensor signal received from in-vehicle sensor
INT TEMP SEN	[°C]	Intake sensor value converted from intake sensor signal received from intake sensor
SUNLOAD SEN	[w/m^2]	Sunload sensor value converted from sunload sensor signal received from sunload sensor
AMB SEN CAL	[°C]	Ambient sensor value calculated by A/C auto amp.
IN-VEH CAL	[°C]	In-vehicle sensor value calculated by A/C auto amp.

Monitor item [Unit]		Description
INT TEMP CAL	[°C]	Intake sensor value calculated by A/C auto amp.
SUNL SEN CAL	[w/m^2]	Sunload sensor value calculated by A/C auto amp.
FAN DUTY	[%]	Duty ratio of blower motor judged by A/C auto amp.
XM		Target discharge air temperature judged by A/C auto amp. according to the temperature setting and the value from each sensor
ENG COOL TEMP	[°C]	Water temperature signal value received from ECM via CAN communication
VEHICLE SPEED	[Mph (km/h)]	Vehicle speed signal value received from meter via CAN communication

ACTIVE TEST

Test item	Description
ALL SEG	Indicator all segment lighting
HVAC TEST	The operation check of A/C system can be performed by selecting the mode. Refer to the following table for the conditions of each mode.

HVAC TEST

	Test item						
	MODE 1	MODE 2	MODE 3	MODE 4	MODE 5	MODE 6	MODE 7
Mode door position	VENT	B/L1	B/L2	AUTO FOOT	D/F	DEF	-
Intake door position	REC	REC	20% FRE	FRE	FRE	FRE	-
Air mix door position (driver & passenger side)	FULL COLD	FULL COLD	FULL HOT	FULL HOT	FULL HOT	FULL HOT	-
Blower motor duty ratio	37%	91%	65%	65%	65%	91%	-
Compressor (Magnet clutch)	ON	ON	OFF	OFF	ON	ON	-

NOTE:
- Perform the inspection of each output device after starting the engine because the compressor is operated.
- When choosing to “MODE 7”, error message is displayed but it is not malfunction.

WORK SUPPORT

Work item	Description	Reference
TEMP SET CORRECT	If the temperature felt by the customer is different than the air flow temperature controlled by the temperature setting, the auto amplifier control temperature can be adjusted to compensate for the temperature setting.	HAC-10, "Temperature Setting Trimmer"
BLOW SET	In the FOOT mode, the air blowing to the DEF can change ON/OFF.	HAC-10, "Foot Position Setting Trimmer"

Work item	Description	Reference
FRE MEMORY SET	• If the ignition switch is turned to the OFF position while the FRE switch is set to ON (fresh air intake), “Perform the memory” or “Do not perform the memory” of the FRE switch ON (fresh air intake) condition can be selected. • If “Perform the memory” was set, the FRE switch will be ON (fresh air intake) when turning the ignition switch to the ON position again. • If “Do not perform the memory” was set, the air inlets will be controlled automatically when turning the ignition switch to the ON position again.	HAC-11, "Inlet Port Memory Function (FRE)"
REC MEMORY SET	• If the ignition switch is turned to the OFF position while the REC switch is set to ON (recirculation), “Perform the memory” or “Do not perform the memory” of the REC switch ON (recirculation) condition can be selected. • If “Perform the memory” was set, the REC switch will be ON (recirculation) when turning the ignition switch to the ON position again. • If “Do not perform the memory” was set, the air inlets will be controlled automatically when turning the ignition switch to the ON position again.	HAC-11, "Inlet Port Memory Function (REC)"

NOTE:
When the battery cable is disconnected from the negative terminal or when the battery voltage becomes 10 V or less, the setting of WORK SUPPORT may be cancelled.

COMPONENT DIAGNOSIS

U1000 CAN COMM CIRCUIT

Description

INFOID:0000000003846322

CAN (Controller Area Network) is a serial communication line for real time application. It is an on-vehicle multiplex communication line with high data communication speed and excellent error detection ability. Many electronic control units are equipped onto a vehicle, and each control unit shares information and links with other control units during operation (not independent). In CAN communication, control units are connected with two communication lines (CAN-H line, CAN-L line) allowing a high rate of information transmission with less wiring. Each control unit transmits/receives data but selectively reads required data only.
CAN Communication Signal Chart. Refer to LAN-13, "How to Use CAN Communication Signal Chart".

DTC Logic

INFOID:0000000003846323

DTC DETECTION LOGIC

DTC	Items (CONSULT-III screen terms)	Diagnostic item is detected when...	Possible cause
U1000	CAN COMM CIRCUIT	When A/C auto amp. is not transmitting or receiving CAN communication signal for 2 or more seconds.	CAN communication system

Diagnosis Procedure

INFOID:0000000003846324

1. CHECK WITH SELF-DIAGNOSIS FUNCTION OF CONSULT-III

1. Turn ignition switch ON and wait for 2 or more seconds.
2. Using CONSULT-III, perform “SELF-DIAGNOSIS RESULTS” of HVAC.

Is “CAN COMM CIRCUIT” displayed?

YES >> Perform trouble diagnosis for the CAN communication system. Refer to LAN-14, "Trouble Diagnosis Flow Chart".
NO >> Perform the intermittent malfunction diagnosis. Refer to GI-35, "Intermittent Incident".

U1010 CONTROL UNIT (CAN)

Description

INFOID:0000000003846325

Initial diagnosis of A/C auto amp.

DTC Logic

INFOID:0000000003846326

DTC DETECTION LOGIC

DTC	Items (CONSULT-III screen terms)	Diagnostic item is detected when...	Possible cause
U1010	CONTROL UNIT (CAN)	When detecting error during the initial diagnosis of CAN controller of A/C auto amp.	A/C auto amp.

Diagnosis Procedure

INFOID:0000000003846327

1. CHECK WITH SELF-DIAGNOSIS FUNCTION OF CONSULT-III

Using CONSULT-III, perform “SELF-DIAGNOSIS RESULTS” of HVAC.

Is DTC “U1010” displayed?

YES >> Replace A/C auto amp.
NO >> INSPECTION END.

B257B, B257C AMBIENT SENSOR

Description

INFOID:0000000003846328

COMPONENT DESCRIPTION

Ambient Sensor

- The ambient sensor (1) is installed behind left side of front bumper.
- It detects ambient temperature and converts it into a resistance value which is then input into the A/C auto amp.

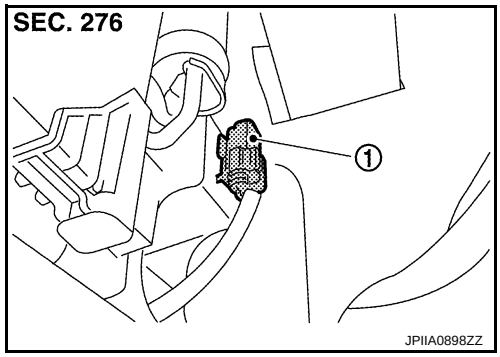

Ambient Sensor Circuit

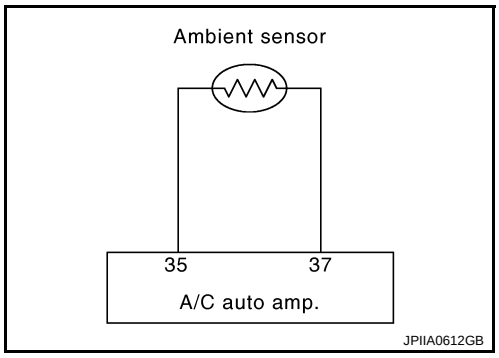

AMBIENT TEMPERATURE INPUT PROCESS

The A/C auto amp. equips a processing circuit for the ambient sensor input. However, when the temperature detected by the ambient sensor increases quickly, the processing circuit retards the A/C auto amp. function. It only allows the A/C auto amp. to recognize an ambient temperature increase of 0.33°C (0.6°F) per 100 seconds.

As an example, consider stopping for a few minutes after high speed driving. Although the actual ambient temperature has not changed, the temperature detected by the ambient sensor increases. This is because the heat from the engine compartment can radiate to the front bumper area, the location of the ambient sensor.

DTC Logic

INFOID:0000000003846329

DTC DETECTION LOGIC

NOTE:

- If DTC is displayed along with DTC U1000 or U1010, first diagnose the DTC U1000 or U1010. Refer to HAC-42, "DTC Logic" or HAC-43, "DTC Logic".
- If there is an open circuit in the ambient sensor, A/C auto amp. registers extreme cold [–44°C (–47°F)] and adjusts the temperature control warmer.

DTC	Items (CONSULT-III screen terms)	Diagnostic item is detected when...	Possible cause
B257B	AMB TEMP SEN (SHORT)	Detected temperature at ambient sensor –44°C (–47°F) or less	• Ambient sensor • A/C auto amp. • Harness and connector (Ambient sensor circuit is open, or there is a short in the circuit)
B257C	AMB TEMP SEN (OPEN)	Detected temperature at ambient sensor 100°C (212°F) or more	

DTC CONFIRMATION PROCEDURE

1. CHECK WITH SELF-DIAGNOSIS FUNCTION OF CONSULT-III

1. Using CONSULT-III, perform “SELF-DIAGNOSIS RESULTS” of HVAC.
2. Check if any DTC is displayed in the self-diagnosis results.

NOTE:

- If DTC is displayed along with DTC U1000 or U1010, first diagnose the DTC U1000 or U1010. Refer to HAC-42, "DTC Logic" or HAC-43, "DTC Logic".
- If there is an open circuit in the ambient sensor, A/C auto amp. registers extreme cold [–44°C (–47°F)] and adjusts the temperature control warmer.

Is DTC “B257B” or “B257C” displayed?

YES >> Perform trouble diagnosis for the ambient sensor. Refer to HAC-45, "Diagnosis Procedure".
NO >> INSPECTION END

Diagnosis Procedure

INFOID:0000000003846330

1. CHECK VOLTAGE BETWEEN AMBIENT SENSOR AND GROUND

1. Disconnect ambient sensor connector.
2. Turn ignition switch ON.
3. Check voltage between ambient sensor harness connector and ground.

(+)		(–)	Voltage
Ambient sensor		—	
Connector	Terminal		
E337	1	Ground	Approx. 5 V

Is the inspection result normal?

YES >> GO TO 2.
NO >> GO TO 4.

2. CHECK CIRCUIT CONTINUITY BETWEEN AMBIENT SENSOR AND A/C AUTO AMP.

1. Turn ignition switch OFF.
2. Disconnect A/C auto amp. connector.
3. Check continuity between ambient sensor harness connector and A/C auto amp. harness connector.

Ambient sensor		A/C auto amp.		Continuity
Connector	Terminal	Connector	Terminal	
E337	2	M50	37	Existed

Is the inspection result normal?

YES >> GO TO 3.
NO >> Repair harness or connector.

3. CHECK AMBIENT SENSOR

Check ambient sensor. Refer to HAC-46, "Component Inspection".

Is the inspection result normal?

YES >> Replace A/C auto amp.
NO >> Replace ambient sensor.

4. CHECK CIRCUIT CONTINUITY BETWEEN AMBIENT SENSOR AND A/C AUTO AMP.

1. Turn ignition switch OFF.
2. Disconnect A/C auto amp. connector.
3. Check continuity between ambient sensor harness connector and A/C auto amp. harness connector.

Ambient sensor		A/C auto amp.		Continuity
Connector	Terminal	Connector	Terminal	
E337	1	M50	35	Existed

4. Check continuity between ambient sensor harness connector and ground.

Ambient sensor		—	Continuity
Connector	Terminal		
E337	1	Ground	Not existed

Is the inspection result normal?

YES >> Replace A/C auto amp.
NO >> Repair harness or connector.

Component Inspection

INFOID:0000000003846331

1. CHECK AMBIENT SENSOR

1. Turn ignition switch OFF.
2. Disconnect ambient sensor connector. Refer to VTL-24, "Exploded View".
3. Check resistance between ambient sensor terminals.

Terminal		Condition	Resistance kΩ
		Temperature °C (°F)	
1	2	–15 (5)	12.73
		–10 (14)	9.92
		–5 (23)	7.80
		0 (32)	6.19
		5 (41)	4.95
		10 (50)	3.99
		15 (59)	3.24
		20 (68)	2.65
		25 (77)	2.19
		30 (86)	1.81
		35 (95)	1.51
		40 (104)	1.27
		45 (113)	1.07

Is the inspection result normal?

YES >> END.
NO >> Replace ambient sensor.

B2578, B2579 IN-VEHICLE SENSOR

Description

INFOID:0000000003846332

In-vehicle Sensor

- The in-vehicle sensor (1) is located on instrument driver lower panel.
- It converts variations in compartment air temperature drawn from the aspirator into a resistance value. It is then input into the A/C auto amp.

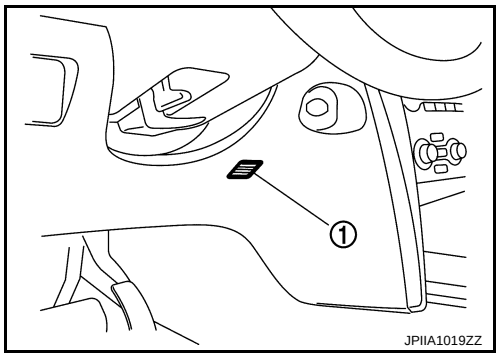

In-vehicle Sensor Circuit

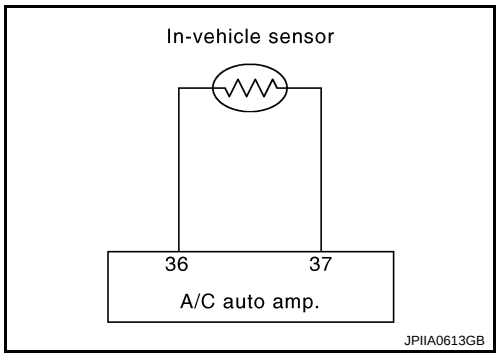

Aspirator

The aspirator (1) is located on driver side of heater & cooling unit assembly. It produces vacuum pressure due to air discharged from the heater & cooling unit assembly, continuously taking compartment air in the aspirator.

⇦: Vehicle front

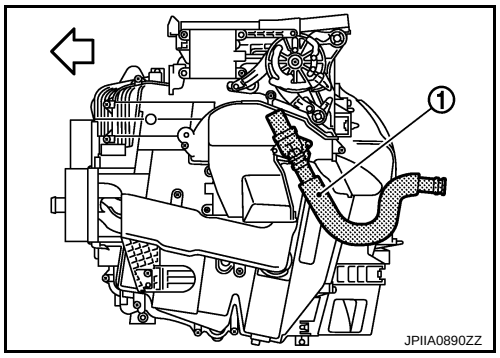

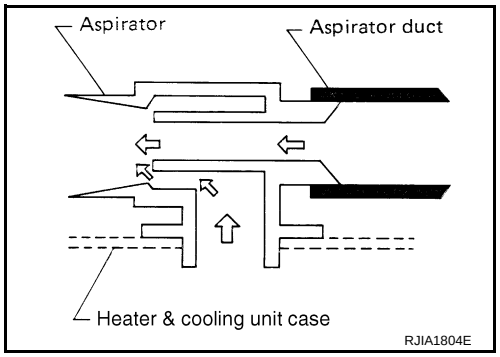

DTC Logic

INFOID:0000000003846333

DTC DETECTION LOGIC

NOTE:

If DTC is displayed along with DTC U1000 or U1010, first diagnose the DTC U1000 or U1010. Refer to HAC-42, "DTC Logic" or HAC-43, "DTC Logic".

DTC	Items (CONSULT-III screen terms)	Diagnostic item is detected when...	Possible cause
B2578	IN CAR SENSOR (OUT OF RANGE [LOW])	Detected temperature at in-vehicle sensor –44°C (–47°F) or less	• In-vehicle sensor • A/C auto amp. • Harness and connector (In-vehicle sensor circuit is open, or there is a short in the circuit)
B2579	IN CAR SENSOR (OUT OF RANGE [HI])	Detected temperature at in-vehicle sensor 100°C (212°F) or more	

DTC CONFIRMATION PROCEDURE

1. CHECK WITH SELF-DIAGNOSIS FUNCTION OF CONSULT-III

1. Using CONSULT-III, perform “SELF-DIAGNOSIS RESULTS” of HVAC.
2. Check if any DTC is displayed in the self-diagnosis results.

NOTE:
If DTC is displayed along with DTC U1000 or U1010, first diagnose the DTC U1000 or U1010. Refer to HAC-42, "DTC Logic" or HAC-43, "DTC Logic".

Is DTC “B2578” or “B2579” displayed?

YES >> Perform trouble diagnosis for the in-vehicle sensor. Refer to HAC-48, "Diagnosis Procedure".
NO >> INSPECTION END

Diagnosis Procedure

INFOID:0000000003846334

1. CHECK VOLTAGE BETWEEN IN-VEHICLE SENSOR AND GROUND

1. Disconnect in-vehicle sensor connector.
2. Turn ignition switch ON.
3. Check voltage between in-vehicle sensor harness connector and ground.

(+)		(–)	Voltage
In-vehicle sensor		—	
Connector	Terminal		
M41	1	Ground	Approx. 5 V

Is the inspection result normal?

YES >> GO TO 2.
NO >> GO TO 4.

2. CHECK CIRCUIT CONTINUITY BETWEEN IN-VEHICLE SENSOR AND A/C AUTO AMP.

1. Turn ignition switch OFF.
2. Disconnect A/C auto amp. connector.
3. Check continuity between in-vehicle sensor harness connector and A/C auto amp. harness connector.

In-vehicle sensor		A/C auto amp.		Continuity
Connector	Terminal	Connector	Terminal	
M41	2	M50	37	Existed

Is the inspection result normal?

YES >> GO TO 3.
NO >> Repair harness or connector.

3. CHECK IN-VEHICLE SENSOR

Check in-vehicle sensor. Refer to HAC-49, "Component Inspection".

Is the inspection result normal?

YES >> Replace A/C auto amp.
NO >> Replace in-vehicle sensor.

4. CHECK CIRCUIT CONTINUITY BETWEEN IN-VEHICLE SENSOR AND A/C AUTO AMP.

1. Turn ignition switch OFF.
2. Disconnect A/C auto amp. connector.
3. Check continuity between in-vehicle sensor harness connector and A/C auto amp. harness connector.

In-vehicle sensor		A/C auto amp.		Continuity
Connector	Terminal	Connector	Terminal	
M41	1	M50	36	Existed

4. Check continuity between in-vehicle sensor harness connector and ground.

In-vehicle sensor		—	Continuity
Connector	Terminal		
M41	1	Ground	Not existed

Is the inspection result normal?

YES >> Replace A/C auto amp.
NO >> Repair harness or connector.

Component Inspection

INFOID:0000000003846335

1. CHECK IN-VEHICLE SENSOR

1. Turn ignition switch OFF.
2. Disconnect in-vehicle sensor connector. Refer to VTL-25, "Exploded View".
3. Check resistance between in-vehicle sensor terminals.

Terminal		Condition	Resistance kΩ
		Temperature °C (°F)	
1	2	–15 (5)	12.73
		–10 (14)	9.92
		–5 (23)	7.80
		0 (32)	6.19
		5 (41)	4.95
		10 (50)	3.99
		15 (59)	3.24
		20 (68)	2.65
		25 (77)	2.19
		30 (86)	1.81
		35 (95)	1.51
		40 (104)	1.27
		45 (113)	1.07

Is the inspection result normal?

YES >> END.
NO >> Replace in-vehicle sensor.

B2581, B2582 INTAKE SENSOR

Description

INFOID:0000000003846336

Intake Sensor
- The intake sensor (2) is located on the evaporator (1).
- It converts air temperature after it passes through the evaporator into a resistance value which is then input to the A/C auto amp.

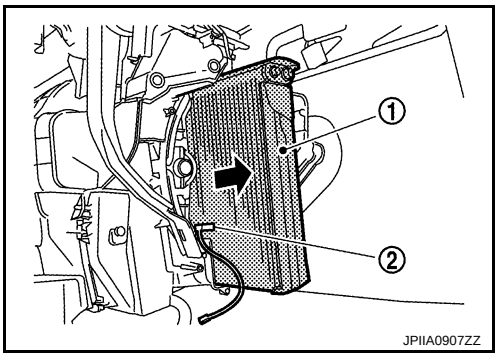

Intake Sensor Circuit

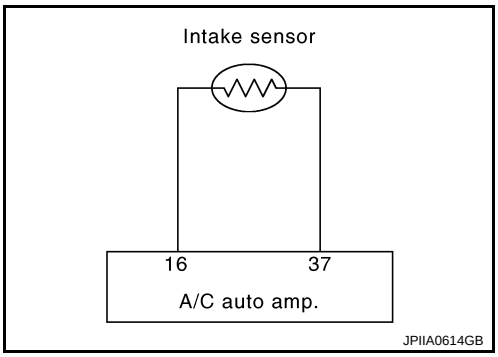

DTC Logic

INFOID:0000000003846337

DTC DETECTION LOGIC

NOTE:
If DTC is displayed along with DTC U1000 or U1010, first diagnose the DTC U1000 or U1010. Refer to HAC-42, "DTC Logic" or HAC-43, "DTC Logic".

DTC	Items (CONSULT-III screen terms)	Diagnostic item is detected when...	Possible cause
B2581	EVAP TEMP SEN (SHORT)	Detected temperature at intake sensor –33°C (–27°F) or less	• Intake sensor • A/C auto amp. • Harness and connector (Intake sensor circuit is open, or there is a short in the circuit)
B2582	EVAP TEMP SEN (OPEN)	Detected temperature at intake sensor 69°C (156°F) or more	

DTC CONFIRMATION PROCEDURE

1. CHECK WITH SELF-DIAGNOSIS FUNCTION OF CONSULT-III

1. Using CONSULT-III, perform “SELF-DIAGNOSIS RESULTS” of HVAC.
2. Check if any DTC is displayed in the self-diagnosis results.

NOTE:
If DTC is displayed along with DTC U1000 or U1010, first diagnose the DTC U1000 or U1010. Refer to HAC-42, "DTC Logic" or HAC-43, "DTC Logic".

Is DTC “B2581” or “B2582” displayed?

YES >> Perform trouble diagnosis for the intake sensor. Refer to HAC-50, "Diagnosis Procedure".
NO >> INSPECTION END

Diagnosis Procedure

INFOID:0000000003846338

1. CHECK VOLTAGE BETWEEN INTAKE SENSOR AND GROUND

1. Disconnect intake sensor connector.
2. Turn ignition switch ON.
3. Check voltage between intake sensor harness connector and ground.

(+)		(–)	Voltage
Intake sensor		—	
Connector	Terminal		
M42	2	Ground	Approx. 5 V

Is the inspection result normal?

YES >> GO TO 2.
NO >> GO TO 4.

2. CHECK CIRCUIT CONTINUITY BETWEEN INTAKE SENSOR AND A/C AUTO AMP.

1. Turn ignition switch OFF.
2. Disconnect A/C auto amp. connector.
3. Check continuity between intake sensor harness connector and A/C auto amp. harness connector.

Intake sensor		A/C auto amp.		Continuity
Connector	Terminal	Connector	Terminal	
M42	1	M50	37	Existed

Is the inspection result normal?

YES >> GO TO 3.
NO >> Repair harness or connector.

3. CHECK INTAKE SENSOR

Check intake sensor. Refer to HAC-51, "Component Inspection".

Is the inspection result normal?

YES >> Replace A/C auto amp.
NO >> Replace intake sensor.

4. CHECK CIRCUIT CONTINUITY BETWEEN INTAKE SENSOR AND A/C AUTO AMP.

1. Turn ignition switch OFF.
2. Disconnect A/C auto amp. connector.
3. Check continuity between intake sensor harness connector and A/C auto amp. harness connector.

Intake sensor		A/C auto amp.		Continuity
Connector	Terminal	Connector	Terminal	
M42	2	M50	16	Existed

4. Check continuity between intake sensor harness connector and ground.

Intake sensor		—	Continuity
Connector	Terminal		
M42	2	Ground	Not existed

Is the inspection result normal?

YES >> Replace A/C auto amp.
NO >> Repair harness or connector.

Component Inspection

INFOID:0000000003846339

1. CHECK INTAKE SENSOR

1. Turn ignition switch OFF.
2. Disconnect intake sensor connector.
3. Check resistance between intake sensor terminals.

Terminal		Condition Temperature °C (°F)	Resistance kΩ
1	2	–15 (5)	17.73
		–10 (14)	13.46
		–5 (23)	10.33
		0 (32)	8.00
		5 (41)	6.26
		10 (50)	4.93
		15 (59)	3.92
		20 (68)	3.14
		25 (77)	2.54
		30 (86)	2.06
		35 (95)	1.69
		40 (104)	1.39
		45 (113)	1.15

Is the inspection result normal?

YES >> END.
NO >> Replace intake sensor.

B2630, B2631 SUNLOAD SENSOR

Description

INFOID:0000000003846340

COMPONENT DESCRIPTION

Sunload Sensor

- The sunload sensor (1) is located on the driver's side speaker grille.
- It detects sunload entering through windshield by means of a photo diode. The sensor converts the sunload into a current value which is then input into the A/C auto amp.

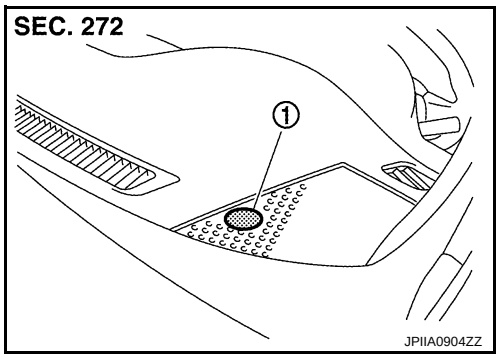

Sunload Sensor Circuit

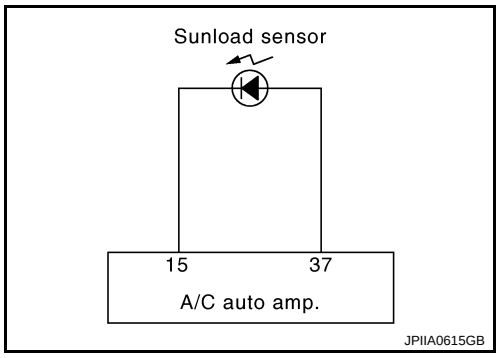

SUNLOAD INPUT PROCESS

The A/C auto amp. also equips a processing circuit which averages the variations in detected sunload over a period of time. This prevents drastic swings in the air temperature control system operation due to small or quick variations in detected sunload.

For example, consider driving along a road bordered by an occasional group of large trees. The sunload detected by the sunload sensor varies whenever the trees obstruct the sunlight. The processing circuit averages the detected sunload over a period of time, so that the (insignificant) effect of the trees momentarily obstructing the sunlight does not cause any change in the air temperature control system operation. On the other hand, shortly after entering a long tunnel, the system recognizes the change in sunload, and the system reacts accordingly.

DTC Logic

INFOID:0000000003846341

DTC DETECTION LOGIC

NOTE:

- If DTC is displayed along with DTC U1000 or U1010, first diagnose the DTC U1000 or U1010. Refer to HAC-42, "DTC Logic" or HAC-43, "DTC Logic".
- Sunload sensor may register a malfunction when indoors, at dusk, or at other times when light is insufficient. When performing the diagnosis indoors, light the sunload sensor with a lamp (60 W or more).

DTC	Items (CONSULT-III screen terms)	Diagnostic item is detected when...	Possible cause
B2630	SUNLOAD SEN (SHORT)	Detected calorie at sunload sensor 64.7 W/m^2 (30 kcal/m^2·h) or less	• Sunload sensor • A/C auto amp. • Harness and connector (Sunload sensor circuit is open, or there is a short in the circuit)
B2631	SUNLOAD SEN (OPEN)	Detected calorie at sunload sensor 2832 W/m^2 (1304 kcal/m^2·h) or more	

DTC CONFIRMATION PROCEDURE

1. CHECK WITH SELF-DIAGNOSIS FUNCTION OF CONSULT-III

1. Using CONSULT-III, perform “SELF-DIAGNOSIS RESULTS” of HVAC.
2. Check if any DTC is displayed in the self-diagnosis results.

NOTE:

- If DTC is displayed along with DTC U1000 or U1010, first diagnose the DTC U1000 or U1010. Refer to HAC-42, "DTC Logic" or HAC-43, "DTC Logic".
- Sunload sensor may register a malfunction when indoors, at dusk, or at other times when light is insufficient. When performing the diagnosis indoors, light the sunload sensor with a lamp (60 W or more).

Is DTC “B2630” or “B2631” displayed?

YES >> Perform trouble diagnosis for the sunload sensor. Refer to HAC-54, "Diagnosis Procedure".
NO >> INSPECTION END

Diagnosis Procedure

INFOID:0000000003846342

1. CHECK VOLTAGE BETWEEN SUNLOAD SENSOR AND GROUND

1. Disconnect sunload sensor connector.
2. Turn ignition switch ON.
3. Check voltage between sunload sensor harness connector and ground.

(+)		(–)	Voltage
Sunload sensor		—	
Connector	Terminal		
M74	1	Ground	Approx. 5 V

Is the inspection result normal?

YES >> GO TO 2.
NO >> GO TO 4.

2. CHECK CIRCUIT CONTINUITY BETWEEN SUNLOAD SENSOR AND A/C AUTO AMP.

1. Turn ignition switch OFF.
2. Disconnect A/C auto amp. connector.
3. Check continuity between sunload sensor harness connector and A/C auto amp. harness connector.

Sunload sensor		A/C auto amp.		Continuity
Connector	Terminal	Connector	Terminal	
M74	2	M50	37	Existed

Is the inspection result normal?

YES >> GO TO 3.
NO >> Repair harness or connector.

3. CHECK SUNLOAD SENSOR

1. Reconnect sunload sensor connector and A/C auto amp. connector.
2. Check sunload sensor. Refer to HAC-55, "Component Inspection".

Is the inspection result normal?

YES >> Replace A/C auto amp.
NO >> Replace sunload sensor.

4. CHECK CIRCUIT CONTINUITY BETWEEN SUNLOAD SENSOR AND A/C AUTO AMP.

1. Turn ignition switch OFF.
2. Disconnect A/C auto amp. connector.
3. Check continuity between sunload sensor harness connector and A/C auto amp. harness connector.

Sunload sensor		A/C auto amp.		Continuity
Connector	Terminal	Connector	Terminal	
M74	1	M50	15	Existed

4. Check continuity between sunload sensor harness connector and ground.

Sunload sensor		—	Continuity
Connector	Terminal		
M74	1	Ground	Not existed

Is the inspection result normal?

YES >> Replace A/C auto amp.
NO >> Repair harness or connector.

Component Inspection

INFOID:0000000003846343

1. CHECK SUNLOAD SENSOR

1. Turn ignition switch ON.
2. Check voltage between A/C auto amp. harness connector and ground.

(+)		(–)
A/C auto amp.		—
Connector	Terminal	
M50	15	Ground

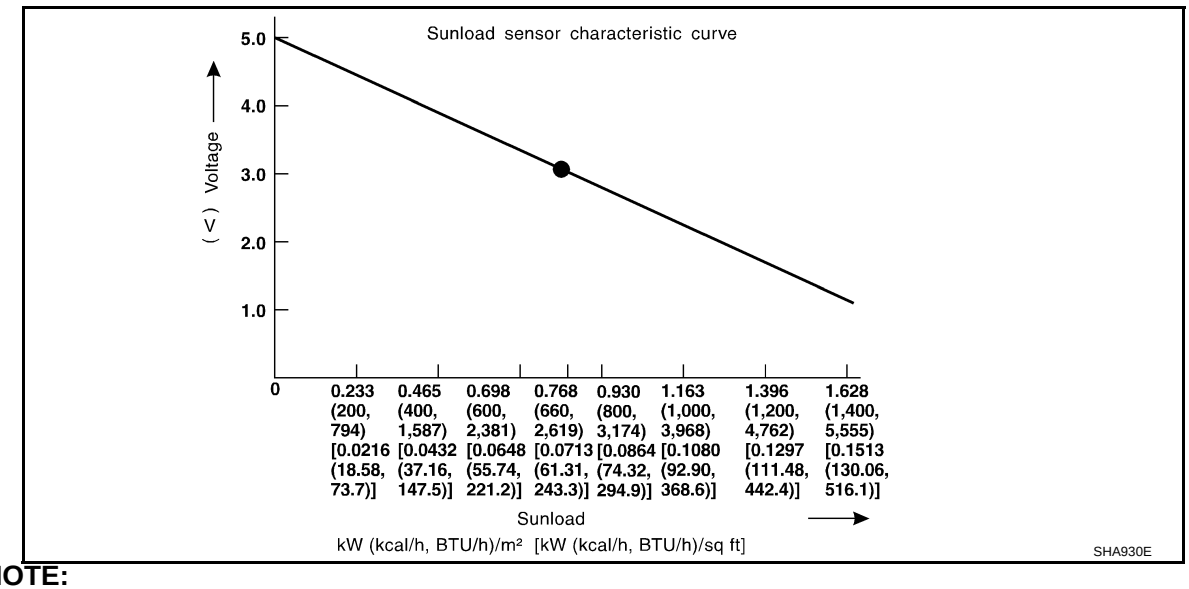

NOTE:
Select a place where sunshine directly on it when checking sunload sensor.

Is the inspection result normal?

YES >> END.
NO >> Replace sunload sensor.

B2632, B2633 AIR MIX DOOR MOTOR (DRIVER SIDE)

Description

INFOID:0000000003846347

COMPONENT DESCRIPTION

Air Mix Door Motor (Driver Side)

- The air mix door motor (driver side) (1) are attached to the heater & cooling unit assembly.

⇦: Vehicle front

- It rotates so that the air mix door is opened or closed to a position set by the A/C auto amp.
- Motor rotation is then conveyed through a shaft and the air mix door position feedback is then sent to the A/C auto amp. by PBR built-in air mix door motor.

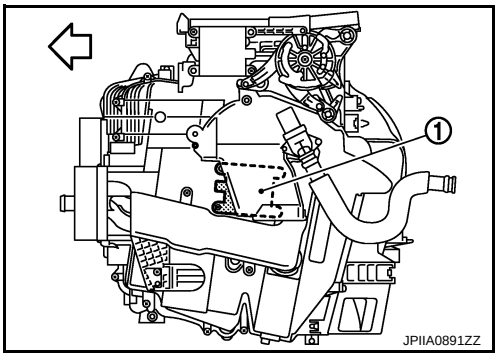

DTC Logic

INFOID:0000000003846348

DTC DETECTION LOGIC

NOTE:
If DTC is displayed along with DTC U1000 or U1010, first diagnose the DTC U1000 or U1010. Refer to HAC-42, "DTC Logic" or HAC-43, "DTC Logic".

DTC	Items (CONSULT-III screen terms)	Diagnostic item is detected when...	Possible cause
B2632	DR AIRMIX ACTR (SHORT)	Air mix door PBR (driver side) position 5% or less	• Air mix door motor (driver side) • A/C auto amp. • Harness and connector (CAN communication line is open or shorted) (Air mix door motor is open or shorted)
B2633	DR AIRMIX ACTR (OPEN)	Air mix door PBR (driver side) position 95% or more	

DTC CONFIRMATION PROCEDURE

1. CHECK WITH SELF-DIAGNOSIS FUNCTION OF CONSULT-III

1. Using CONSULT-III, perform “SELF-DIAGNOSIS RESULTS” of HVAC.
2. Check if any DTC is displayed in the self-diagnosis results.

NOTE:
If DTC is displayed along with DTC U1000 or U1010, first diagnose the DTC U1000 or U1010. Refer to HAC-42, "DTC Logic" or HAC-43, "DTC Logic".

Is DTC “B2632” or “B2633” displayed?

YES >> Perform trouble diagnosis for the air mix door motor (driver side). Refer to HAC-57, "Diagnosis Procedure".
NO >> GO TO 2.

2. FUNCTION INSPECTION

1. Press temperature control “UP” switch (driver side) until 32°C (90°F) is displayed.
2. Check for warm air at discharge air outlets.
3. Operate the compressor.
4. Press temperature control “DOWN” switch (driver side) until 18°C (60°F) is displayed.
5. Check for cool air at air discharge outlets.

Does it operate normally?

YES >> END.
NO >> Check air mix door motor (driver side) installation, and repair or replace the malfunctioning parts.

Diagnosis Procedure

INFOID:0000000003846349

1. CHECK POWER SUPPLY FOR AIR MIX DOOR MOTOR (DRIVER SIDE)

Check voltage between air mix door motor (driver side) harness connector and ground.

(+)		(–)	Voltage
Air mix door motor (driver side)		—	
Connector	Terminal		
M306	1	Ground	Battery voltage

Is the inspection result normal?

YES >> GO TO 2.
NO >> Repair the harnesses or connectors.

2. CHECK SIGNAL FOR AIR MIX DOOR MOTOR (DRIVER SIDE)

Check the output waveform (LAN signal) between air mix door motor (driver side) harness connector and ground using an oscilloscope.

(+)		(–)	Voltage
Air mix door motor (driver side)		—	
Connector	Terminal		
M306	3	Ground	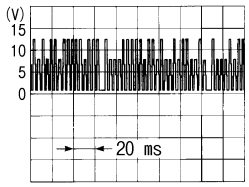 SJIA1453J

Is the inspection result normal?

YES >> GO TO 3.
NO >> Repair the harnesses or connectors.

3. CHECK AIR MIX DOOR MOTOR (DRIVER SIDE) GROUND CIRCUIT

1. Turn ignition switch OFF.
2. Disconnect air mix door motor (driver side) connector.
3. Check continuity between air mix door motor (driver side) harness connector and ground.

Air mix door motor (driver side)		—	Continuity
Connector	Terminal		
M306	2	Ground	Existed

Is the inspection result normal?

YES >> Replace air mix door motor (driver side).
NO >> Repair harness or connector.

B2634, B2635 AIR MIX DOOR MOTOR (PASSENGER SIDE)

Description

INFOID:0000000003846350

COMPONENT DESCRIPTION

Air Mix Door Motor (Passenger Side)

- The air mix door motor (passenger side) (1) are attached to the heater & cooling unit assembly.

⇦: Vehicle front

- It rotates so that the air mix door is opened or closed to a position set by the A/C auto amp.
- Motor rotation is then conveyed through a shaft and the air mix door position feedback is then sent to the A/C auto amp. by PBR built-in air mix door motor.

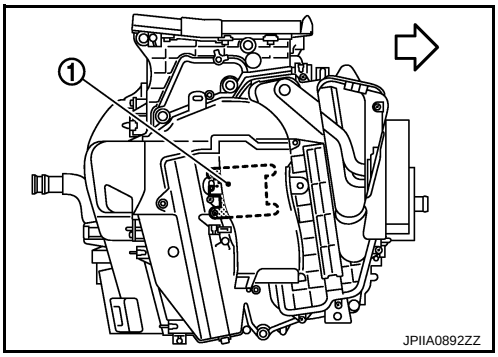

DTC Logic

INFOID:0000000003846351

DTC DETECTION LOGIC

NOTE:

If DTC is displayed along with DTC U1000 or U1010, first diagnose the DTC U1000 or U1010. Refer to HAC-42, "DTC Logic" or HAC-43, "DTC Logic".

DTC	Items (CONSULT-III screen terms)	Diagnostic item is detected when...	Possible cause
B2634	PASS AIRMIX ACTR (SHORT)	Air mix door PBR (passenger side) position 5% or less	• Air mix door motor (passenger side) • A/C auto amp. • Harness and connector (CAN communication line is open or shorted) (Air mix door motor is open or shorted)
B2635	PASS AIRMIX ACTR (OPEN)	Air mix door PBR (passenger side) position 95% or more	

DTC CONFIRMATION PROCEDURE

1. CHECK WITH SELF-DIAGNOSIS FUNCTION OF CONSULT-III

1. Using CONSULT-III, perform “SELF-DIAGNOSIS RESULTS” of HVAC.
2. Check if any DTC is displayed in the self-diagnosis results.

NOTE:

If DTC is displayed along with DTC U1000 or U1010, first diagnose the DTC U1000 or U1010. Refer to HAC-42, "DTC Logic" or HAC-43, "DTC Logic".

Is DTC “B2634” or “B2635” displayed?

YES >> Perform trouble diagnosis for the air mix door motor (passenger side). Refer to HAC-59, "Diagnosis Procedure".

NO >> GO TO 2.

2. FUNCTION INSPECTION

1. Press temperature control “UP” switch (passenger side) until 32°C (90°F) is displayed.
2. Check for warm air at discharge air outlets.
3. Operate the compressor.
4. Press temperature control “DOWN” switch (passenger side) until 18°C (60°F) is displayed.
5. Check for cool air at air discharge outlets.

Does it operate normally?

YES >> END.

NO >> Check air mix door motor (passenger side) installation, and repair or replace the malfunctioning parts.

Diagnosis Procedure

INFOID:0000000003846352

1. CHECK POWER SUPPLY FOR AIR MIX DOOR MOTOR (PASSENGER SIDE)

Check voltage between air mix door motor (passenger side) harness connector and ground.

(+)		(–)	Voltage
Air mix door motor (passenger side)		—	
Connector	Terminal		
M307	1	Ground	Battery voltage

Is the inspection result normal?

YES >> GO TO 2.
NO >> Repair the harnesses or connectors.

2. CHECK SIGNAL FOR AIR MIX DOOR MOTOR (PASSENGER SIDE)

Check the output waveform (LAN signal) between air mix door motor (passenger side) harness connector and ground using an oscilloscope.

(+)		(–)	Voltage
Air mix door motor (passenger side)		—	
Connector	Terminal		
M307	3	Ground	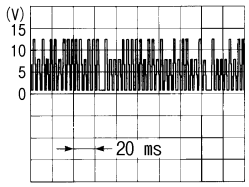 SJIA1453J

Is the inspection result normal?

YES >> GO TO 3.
NO >> Repair the harnesses or connectors.

3. CHECK AIR MIX DOOR MOTOR (PASSENGER SIDE) GROUND CIRCUIT

1. Turn ignition switch OFF.
2. Disconnect air mix door motor (passenger side) connector.
3. Check continuity between air mix door motor (passenger side) harness connector and ground.

Air mix door motor (passenger side)		—	Continuity
Connector	Terminal		
M307	2	Ground	Existed

Is the inspection result normal?

YES >> Replace air mix door motor (passenger side).
NO >> Repair harness or connector.

B2636, B2637, B2638, B2639, B2654, B2655 MODE DOOR MOTOR

Description

INFOID:0000000003846353

COMPONENT DESCRIPTION

Mode Door Motor

- The mode door motor (1) are attached to the heater & cooling unit assembly.

⇦: Vehicle front

- It rotates so that air is discharged from the outlet set by the A/C auto amp. Motor rotation is conveyed to a link which activates the mode door.

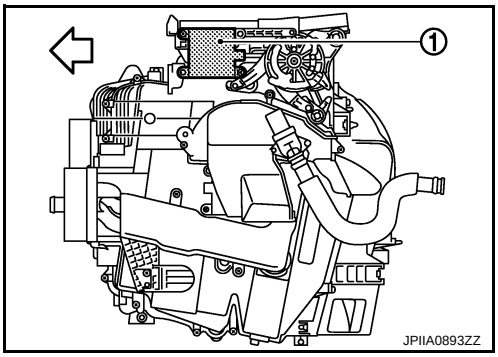

DTC Logic

INFOID:0000000003846354

DTC DETECTION LOGIC

NOTE:
If DTC is displayed along with DTC U1000 or U1010, first diagnose the DTC U1000 or U1010. Refer to HAC-42, "DTC Logic" or HAC-43, "DTC Logic".

DTC	Items (CONSULT-III screen terms)	Diagnostic item is detected when...	Possible cause
B2636	DR VENT DOOR FAIL	When the malfunctioning door position is detected at VENT position	• Mode door motor • A/C auto amp. • Harness and connector (CAN communication line is open or shorted) (Mode door motor is open or shorted)
B2637	DR B/L DOOR FAIL	When the malfunctioning door position is detected at B/L position	
B2638	DR D/F1 DOOR FAIL	When the malfunctioning door position is detected at FOOT position	
B2639	DR DEF DOOR FAIL	When the malfunctioning door position is detected at DEF position	
B2654	D/F2 DOOR FAIL	When the malfunctioning door position is detected at D/F position	
B2655	B/L2 DOOR FAIL	When the malfunctioning door position is detected at B/L2 position	

DTC CONFIRMATION PROCEDURE

1. CHECK WITH SELF-DIAGNOSIS FUNCTION OF CONSULT-III

1. Using CONSULT-III, perform “SELF-DIAGNOSIS RESULTS” of HVAC.
2. Check if any DTC is displayed in the self-diagnosis results.

NOTE:
If DTC is displayed along with DTC U1000 or U1010, first diagnose the DTC U1000 or U1010. Refer to HAC-42, "DTC Logic" or HAC-43, "DTC Logic".

Is DTC “ B2636 ”, “ B2637 ”, “B2638 ”, “B2639 ”, “B2654 ” or “B2655 ” displayed?

YES >> Perform trouble diagnosis for the mode door motor. Refer to HAC-61, "Diagnosis Procedure".
NO >> GO TO 2.

2. FUNCTION INSPECTION

1. Press MODE switch and DEF switch.
2. Each position indicator should change shape.

3. Confirm that air discharge comes out according to the air distribution table at below. Refer to HAC-17, "System Description".

Discharge air flow						
Mode position indication	Condition	Air outlet/distribution				
		VENT		FOOT		DEF
		Front	Rear	Front	Rear	
	DUAL switch: OFF Rear ventilator : OPEN	89%	11%	—	—	—
		46%	17%	27%	10%	—
		14%	16%	34%	14%	22%
		12%	16%	27%	13%	32%
		11%	12%	—	—	77%

JPIIA0877GB

NOTE:
Confirm that the compressor clutch is engaged (Sound or visual inspection) and intake door position is at FRE when DEF is selected.

Does it operate normally?

YES >> END.
NO >> Check mode door motor installation, and repair or replace the malfunctioning parts.

Diagnosis Procedure

INFOID:0000000003846355

1. CHECK POWER SUPPLY FOR MODE DOOR MOTOR

Check voltage between mode door motor harness connector and ground.

(+)		(–)	Voltage
Mode door motor		—	
Connector	Terminal		
M310	1	Ground	Battery voltage

Is the inspection result normal?

YES >> GO TO 2.
NO >> Repair harness or connector.

2. CHECK SIGNAL FOR MODE DOOR MOTOR

Confirm A/C LAN signal between mode door motor harness connector and ground using an oscilloscope.

(+)		(–)	Voltage
Mode door motor		—	
Connector	Terminal		
M310	3	Ground	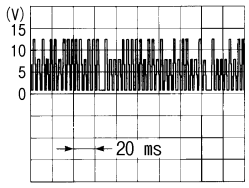 SJIA1453J

Is the inspection result normal?

YES >> GO TO 3.
NO >> Repair harness or connector.

3. CHECK MODE DOOR MOTOR GROUND CIRCUIT

1. Turn ignition switch OFF.
2. Disconnect mode door motor connector.
3. Check continuity between mode door motor harness connector and ground.

Mode door motor		—	Continuity
Connector	Terminal		
M310	2	Ground	Existed

Is the inspection result normal?

YES >> Replace mode door motor.
NO >> Repair harness or connector.

B263D B263E, B263F, B2656 INTAKE DOOR MOTOR

Description

INFOID:0000000003846356

COMPONENT DESCRIPTION

Intake Door Motor

- The intake door motor (1) is attached to the blower unit.

⇦: Vehicle front

- It rotates so that air is drawn from inlets set by the A/C auto amp. Motor rotation is conveyed to a lever which activates the intake door.

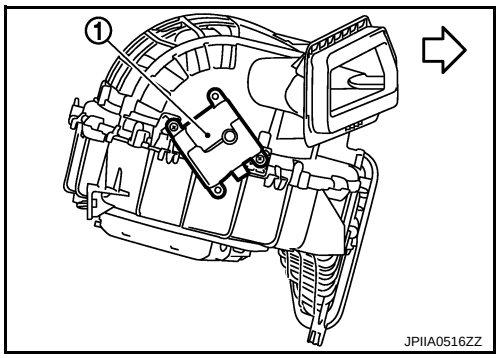

DTC Logic

INFOID:0000000003846357

DTC DETECTION LOGIC

NOTE:
If DTC is displayed along with DTC U1000 or U1010, first diagnose the DTC U1000 or U1010. Refer to HAC-42, "DTC Logic" or HAC-43, "DTC Logic".

DTC	Items (CONSULT-III screen terms)	Diagnostic item is detected when...	Possible cause
B263D	FRE DOOR FAIL	When the malfunctioning intake door position is detected at FRE position	• Intake door motor • A/C auto amp. • Harness and connector (CAN communication line is open or shorted) (Intake door motor is open or shorted)
B263E	20P FRE DOOR FAIL	When the malfunctioning intake door position is detected at 20%FRE position	
B263F	REC DOOR FAIL	When the malfunctioning intake door position is detected at REC position	
B2656	BTC FRE DOOR FAIL	When the malfunctioning intake door position is detected	

DTC CONFIRMATION PROCEDURE

1. CHECK WITH SELF-DIAGNOSIS FUNCTION OF CONSULT-III

1. Using CONSULT-III, perform “SELF-DIAGNOSIS RESULTS” of HVAC.
2. Check if any DTC is displayed in the self-diagnosis results.

NOTE:
If DTC is displayed along with DTC U1000 or U1010, first diagnose the DTC U1000 or U1010. Refer to HAC-42, "DTC Logic" or HAC-43, "DTC Logic".

Is DTC “B263D”, “B263E”, “B263F” or “B2656” displayed?

YES >> Perform trouble diagnosis for the intake door motor. Refer to HAC-64, "Diagnosis Procedure".
NO >> GO TO 2.

2. FUNCTION INSPECTION

1. Press REC switch.
2. The REC switch indicator is turned ON. (REC position)
3. Listen for intake door position change (Slight change of blower sound can be heard.).
4. Press FRE switch.
5. The FRE switch indicator is turned ON. (FRE position)
6. Listen for intake door position change (Slight change of blower sound can be heard.).

Does it operate normally?

YES >> INSPECTION END

NO >> Check intake door motor installation, and repair or replace the malfunctioning parts.

Diagnosis Procedure

INFOID:0000000003846358

1. CHECK POWER SUPPLY FOR INTAKE DOOR MOTOR

Check voltage between intake door motor harness connector and ground.

(+)		(–)	Voltage
Intake door motor		—	
Connector	Terminal		
M304	1	Ground	Battery voltage

Is the inspection result normal?

YES >> GO TO 2.
NO >> Repair harness or connector.

2. CHECK SIGNAL FOR INTAKE DOOR MOTOR

Confirm A/C LAN signal between intake door motor harness connector and ground using an oscilloscope.

(+)		(–)	Voltage
Intake door motor		—	
Connector	Terminal		
M304	3	Ground	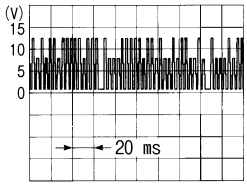 SJIA1453J

Is the inspection result normal?

YES >> GO TO 3.
NO >> Repair harness or connector.

3. CHECK INTAKE DOOR MOTOR GROUND CIRCUIT

1. Turn ignition switch OFF.
2. Disconnect intake door motor connector.
3. Check continuity between intake door motor harness connector and ground.

Intake door motor		—	Continuity
Connector	Terminal		
M304	2	Ground	Existed

Is the inspection result normal?

YES >> Replace intake door motor.
NO >> Repair harness or connector.

POWER SUPPLY AND GROUND CIRCUIT

A/C AUTO AMP.

A/C AUTO AMP. : Diagnosis Procedure

INFOID:0000000003941309

1. CHECK FUSE

Check 10A fuses [Nos. 3, 6 and 19, located in the fuse block (J/B)].

NOTE:

Refer to PG-101, "Fuse, Connector and Terminal Arrangement".

Is the inspection result normal?

YES >> GO TO 2.
NO >> Replace the fuse after repairing the applicable circuit.

2. CHECK A/C AUTO AMP. POWER SUPPLY CIRCUIT

1. Disconnect the A/C auto amp. connector.
2. Check voltage between A/C auto amp. harness connector and ground.

(+)		(–)	Voltage		
A/C auto amp.		—	Ignition switch position		
Connector	Terminal		OFF	ACC	ON
M50	17	Ground	Approx. 0 V	Battery voltage	Battery voltage
	20		Approx. 0 V	Approx. 0 V	Battery voltage
	40		Battery voltage	Battery voltage	Battery voltage

Is the inspection result normal?

YES >> GO TO 3.
NO >> Repair the harnesses or connectors.

3. CHECK A/C AUTO AMP. CIRCUIT CONTINUITY

1. Turn ignition switch OFF.
2. Check continuity between A/C auto amp. harness connector and ground.

A/C auto amp.		—	Continuity
Connector	Terminal		
M50	19	Ground	Existed
	39		

Is the inspection result normal?

YES >> INSPECTION END
NO >> Repair the harnesses or connectors.

A/C CONTROL

A/C CONTROL : Diagnosis Procedure

INFOID:0000000003846370

1. CHECK A/C CONTROL POWER SUPPLY CIRCUIT

1. Disconnect the A/C control connector.
2. Turn ignition switch ON.
3. Check voltage between A/C control harness connector and ground.

(+)		(–)	Voltage
A/C control		—	
Connector	Terminal		
M95	1	Ground	Battery voltage

Is the inspection result normal?

YES >> GO TO 2.
NO >> Check 10A fuse (No. 3, located in the fuse block). Refer to PG-101, "Fuse, Connector and Terminal Arrangement".
- If fuse is OK, check harness for open circuit. Repair or replace if necessary.
- If fuse is NG, replace fuse and check for short circuit. Repair or replace if necessary.

2. CHECK A/C CONTROL CIRCUIT CONTINUITY

1. Turn ignition switch OFF.
2. Check continuity between A/C control harness connector and ground.

A/C control		—	Continuity
Connector	Terminal		
M95	2	Ground	Existed

Is the inspection result normal?

YES >> Replace the A/C control.
NO >> Repair the harnesses or connectors.

A/C DISPLAY

A/C DISPLAY : Diagnosis Procedure

INFOID:0000000003846371

1. CHECK A/C DISPLAY POWER SUPPLY CIRCUIT

1. Disconnect the A/C display connector.
2. Turn ignition switch ON.
3. Check voltage between A/C display harness connector and ground.

(+)		(–)	Voltage
A/C display		—	
Connector	Terminal		
M16	6	Ground	Battery voltage

Is the inspection result normal?

YES >> GO TO 2.
NO >> Repair the harnesses or connectors.

2. CHECK A/C DISPLAY CIRCUIT CONTINUITY

1. Turn ignition switch OFF.
2. Check continuity between A/C display harness connector and ground.

A/C display		—	Continuity
Connector	Terminal		
M16	1	Ground	Existed

Is the inspection result normal?

YES >> Replace the A/C display.
NO >> Check 10A fuse (No. 3, located in the fuse block). Refer to PG-101, "Fuse, Connector and Terminal Arrangement".
- If fuse is OK, check harness for open circuit. Repair or replace if necessary.
- If fuse is NG, replace fuse and check for short circuit. Repair or replace if necessary.

A/C AUTO AMP.

Description

INFOID:0000000003940951

COMPONENT DESCRIPTION

A/C Auto Amp. (Air Conditioner Automatic Amplifier)

The A/C auto amp. (1) has a built-in microcomputer that processes information sent from various sensors needed for air conditioner operation. The air mix door motors, the mode door motor, the intake door motor, the blower motor and the compressor are then controlled.

When the various switches and temperature control dial are operated, data is input to the A/C auto amp. from the A/C control.

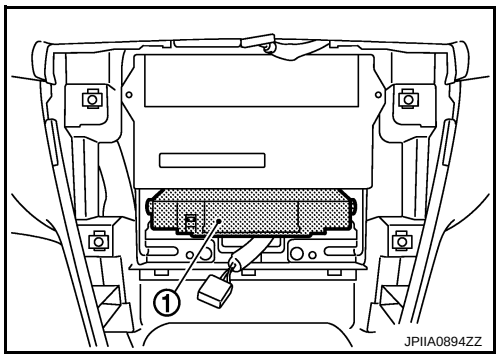

Component Function Check

INFOID:0000000003940952

1. CHECK OPERATION

1. Press the AUTO switch, and then check that “AUTO” is shown on the display.
2. Operate the temperature control dial (driver side). Check that the fan speed or outlet changes. (The discharge air temperature or fan speed varies depending on the ambient temperature, in-vehicle temperature, and temperature setting.)

Does it operate normally?

YES >> INSPECTION END
NO >> Perform trouble diagnosis for the A/C system. Refer to HAC-67, "Diagnosis Procedure".

Diagnosis Procedure

INFOID:0000000003940953

1. INSPECTION BY FAIL-SAFE FUNCTION

1. Turn the ignition switch ON.
2. After approximately 30 seconds, check that the air conditioner is operated by the fail-safe function (the operation display of air conditioner is not performed). Refer to HAC-84, "Fail-Safe".

Is the fail-safe function operated?

YES >> GO TO 3.
NO >> GO TO 2.

2. CHECK A/C AUTO AMP. POWER SUPPLY CIRCUIT AND GROUND

Check A/C auto amp. power supply circuit and ground circuit. Refer to HAC-65, "A/C AUTO AMP. : Diagnosis Procedure".

Is the inspection result normal?

YES >> GO TO 3.
NO >> Repair or replace parts according to the inspection results.

3. CHECK A/C CONTROL SIGNAL CIRCUIT

Check the A/C control signal circuit. Refer to HAC-74, "Diagnosis Procedure".

Is the inspection result normal?

YES >> INSPECTION END
NO >> Repair or replace parts according to the inspection results.

BLOWER MOTOR

Description

INFOID:0000000003846359

COMPONENT DESCRIPTION

Brush-less Motor

The blower motor utilizes a brush-less motor with a rotating magnet. Quietness is improved over previous motors where the brush was the point of contact and the coil rotated.

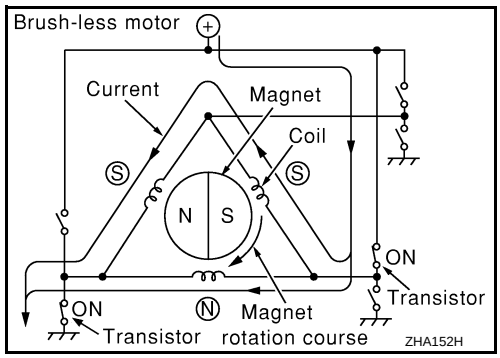

Blower Motor Circuit

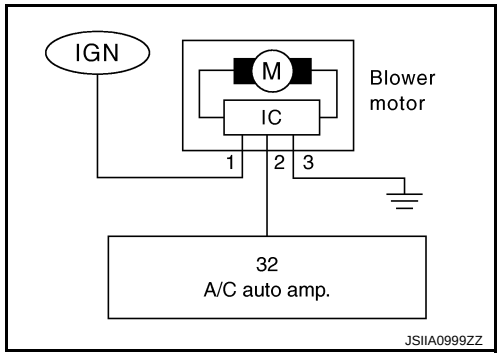

Component Function Check

INFOID:0000000003846360

1. CHECK OPERATION

1. Warm up the engine.
2. Operate the fan control dial. Check that the fan speed and indicator are switched for all fan speeds.

Does it operate normally?

YES >> INSPECTION END
NO >> Perform trouble diagnosis for the blower motor. Refer to HAC-68, "Diagnosis Procedure".

Diagnosis Procedure

INFOID:0000000003846361

1. CHECK WITH SELF-DIAGNOSIS FUNCTION OF CONSULT-III

1. Using CONSULT-III, perform “SELF-DIAGNOSIS RESULTS” of HVAC.
2. Check if any DTC is displayed in the self-diagnosis results.

NOTE:
If DTC is displayed along with DTC U1000 or U1010, first diagnose the DTC U1000 or U1010. Refer to HAC-42, "DTC Logic" or HAC-43, "DTC Logic".

Is any DTC displayed?

YES >> Perform the diagnosis that is applicable to the sensor and actuator. Refer to HAC-85, "DTC Index".
NO >> GO TO 2.

2. CHECK WITH ACTIVE TEST OF CONSULT-III

1. Using CONSULT-III, perform “HVAC TEST” “ACTIVE TEST” of HVAC to check each output device. Refer to HAC-38, "CONSULT-III Function".
   NOTE:
   Perform the ACTIVE TEST after starting the engine because the compressor is operated.

2. Check that the blower motor control signal changes according to each indicator signal.

	Test item						
	MODE 1	MODE 2	MODE 3	MODE 4	MODE 5	MODE 6	MODE 7
Mode door position	VENT	B/L1	B/L2	AUTO FOOT	D/F	DEF	-
Intake door position	REC	REC	20% FRE	FRE	FRE	FRE	-
Air mix door position (driver & passenger side)	FULL COLD	FULL COLD	FULL HOT	FULL HOT	FULL HOT	FULL HOT	-
Blower motor duty ratio	37%	91%	65%	65%	65%	91%	-
Compressor (Magnet clutch)	ON	ON	OFF	OFF	ON	ON	-

NOTE:
- Perform the inspection of each output device after starting the engine because the compressor is operated.
- When choosing to “MODE 7”, error message is displayed but it is not malfunction.

Does it operate normally?

YES >> INSPECTION END
NO >> GO TO 3.

3. CHECK POWER SUPPLY FOR BLOWER MOTOR

1. Disconnect blower motor connector.
2. Turn ignition switch ON.
3. Check voltage between blower motor harness connector and ground.

(+)		(–)	Voltage
Blower motor		—	
Connector	Terminal		
M98	1	Ground	Battery voltage

Is the inspection result normal?

YES >> GO TO 4.
NO >> GO TO 7.

4. CHECK BLOWER MOTOR GROUND CIRCUIT

1. Turn ignition switch OFF.
2. Check continuity between blower motor harness connector and ground.

Blower motor		—	Continuity
Connector	Terminal		
M98	3	Ground	Existed

Is the inspection result normal?

YES >> GO TO 5.
NO >> Repair harness or connector.

5. CHECK BLOWER MOTOR CIRCUIT CONTINUITY

1. Disconnect A/C auto amp. connector.
2. Check continuity between blower motor harness connector and A/C auto amp. harness connector.

Blower motor		A/C auto amp.		Continuity
Connector	Terminal	Connector	Terminal	
M98	2	M50	32	Existed

Is the inspection result normal?

YES >> GO TO 6.
NO >> Repair harness or connector.

6. CHECK A/C AUTO AMP. OUTPUT SIGNAL

1. Reconnect blower motor connector and A/C auto amp. connector.
2. Turn ignition switch ON.
3. Set MODE switch to the VENT position.
4. Check the output waveform between blower motor harness connector and ground using an oscilloscope, while varying the fan speed from 1 to 7.

Blower fan speed (Manual) VENT mode	1st	2nd	3rd	4th	5th	6th	7th
Blower motor connector M 98 terminal No. 2 (Oscilloscope)	T1 Approx. 1.6 ms	T2 Approx. 1.6 ms	T3 Approx. 1.6 ms	T4 Approx. 1.6 ms	T5 Approx. 1.6 ms	T6 Approx. 1.6 ms	T7 Approx. 1.6 ms
Duty ratio	Approx. 25%	Approx. 33%	Approx. 41%	Approx. 51%	Approx. 61%	Approx. 69%	Approx. 75%

NOTE: Duty ratio = $\frac{Tx}{\text{Approx. 1.6 ms}}$ x 100 (%)

JPIIA1025GB

Is the inspection result normal?

YES >> Replace the blower motor.
NO >> Replace the A/C auto amp.

7. CHECK POWER VOLTAGE OF BLOWER RELAY

1. Turn the ignition switch OFF.
2. Remove the blower relay. Refer to PG-101, "Fuse, Connector and Terminal Arrangement".
3. Turn the ignition switch ON.
4. Check the voltage between blower relay fuse block side terminal and ground. Refer to PG-101, "Fuse, Connector and Terminal Arrangement" for relay terminal assignment.

(+)	(–)	Voltage
Blower relay	—	
1	Ground	Battery voltage
3		

Is the inspection result normal?

YES >> GO TO 8.
NO >> Inspection the power supply circuit. Refer to PG-55, "Wiring Diagram - IGNITION POWER SUPPLY -".

8. CHECK BLOWER RELAY

1. Turn the ignition switch OFF.
2. Install the blower relay. Refer to PG-101, "Fuse, Connector and Terminal Arrangement".
3. Turn the ignition switch ON.
4. Check the operating sound of blower relay.

Is the inspection result normal?

YES >> GO TO 9.
NO >> Replace the blower relay.

9. CHECK FUSE

Check 15A fuses (Nos. 21 and 22).

NOTE:
Refer to PG-101, "Fuse, Connector and Terminal Arrangement" for fuse location.

Is the inspection result normal?

YES >> Repair the harnesses or connectors.
NO >> Replace the fuse after repairing the applicable circuit.

Component Inspection

INFOID:0000000003846362

1. CHECK BLOWER MOTOR

1. Remove the blower motor. Refer to VTL-32, "Exploded View".
2. Check that the blower motor rotates smoothly.

Is the inspection result normal?

YES >> END.
NO >> Replace blower motor.

MAGNET CLUTCH

Description

INFOID:0000000003846363

The magnet clutch drives the compressor, by an IPDM E/R signal.

Component Function Check

INFOID:0000000003846364

1.FUNCTION INSPECTION

1. Press AUTO switch.
2. “AUTO” is indicated on the display.
3. Check that the indicator of the A/C switch turns on. Check visually and by sound that the compressor is operating (the discharge air temperature or fan speed varies depending on the ambient temperature, in-vehicle temperature, and temperature setting).
4. Press the A/C switch.
5. Check that the indicator of the A/C switch turns OFF. Check visually and by sound that the compressor stops.

Does it operate normally?

YES >> INSPECTION END
NO >> Perform trouble diagnosis for the compressor. Refer to HAC-72, "Diagnosis Procedure".

Diagnosis Procedure

INFOID:0000000003846365

1.INSPECTION IN AUTO ACTIVE TEST MODE

Perform “AUTO ACTIVE TEST”. Refer to PCS-11, "Diagnosis Description".

Does it operate normally?

YES >> GO TO 5.
NO >> GO TO 2.

2.CHECK MAGNET CLUTCH

1. Turn the ignition switch OFF.
2. Disconnect the magnet clutch connector.
3. Directly apply the battery voltage to the magnet clutch. Check for operation visually and by sound.

Does it operate normally?

YES >> GO TO 3.
NO >> Replace the compressor.

3.CHECK MAGNET CLUTCH CIRCUIT CONTINUITY

1. Turn the ignition switch OFF.
2. Disconnect IPDM E/R connector.
3. Check continuity between magnet clutch harness connector and IPDM E/R harness connector.

IPDM E/R		Compressor		Continuity
Connector	Terminal	Connector	Terminal	
F12	48	F18	1	Existed

Is the inspection result normal?

YES >> GO TO 4.
NO >> Repair harness or connector.

4.CHECK FUSE

Check 10A fuse (No. 49).

NOTE:

Refer to PG-101, "Fuse, Connector and Terminal Arrangement" for fuse location.

Is the inspection result normal?

YES >> Replace IPDM E/R.
NO >> Replace the fuse after repairing the applicable circuit.

5. CHECK WITH SELF-DIAGNOSIS FUNCTION OF CONSULT-III

1. Using CONSULT-III, perform “SELF-DIAGNOSIS RESULTS” of HVAC.
2. Check if any DTC is displayed in the self-diagnosis results.

NOTE:
If DTC is displayed along with DTC U1000 or U1010, first diagnose the DTC U1000 or U1010. Refer to HAC-42, "DTC Logic" or HAC-43, "DTC Logic".

Is any DTC displayed?

YES >> Perform the diagnosis that is applicable to the sensor and actuator. Refer to HAC-85, "DTC Index".
NO >> GO TO 6.

6. CHECK A/C AUTO AMP. INPUT SIGNAL

Using CONSULT-III, check “On/Off” of “AIR COND SIG” and “HEATER FAN SW” in “DATA MONITOR” of HVAC. Refer to HAC-38, "CONSULT-III Function".

A/C SWITCH ON	**: AIR COND SIG On**
A/C SWITCH OFF	**: AIR COND SIG Off**
FAN CONTROL DIAL ON	**: HEATER FAN SW On**
FAN CONTROL DIAL OFF	**: HEATER FAN SW Off**

Is the inspection result normal?

YES >> GO TO 7.
NO >> Replace A/C auto amp.

7. CHECK REFRIGERANT PRESSURE SENSOR

Check refrigerant pressure sensor. Refer to EC-348, "Diagnosis Procedure".

Is the inspection result normal?

YES >> INSPECTION END
NO >> Repair or replace malfunctioning parts.

A/C CONTROL SIGNAL CIRCUIT

Diagnosis Procedure

INFOID:0000000003846366

1. CHECK WITH SELF-DIAGNOSIS FUNCTION OF CONSULT-III

1. Using CONSULT-III, perform “SELF-DIAGNOSIS RESULTS” of HVAC.
2. Check if any DTC is displayed in the self-diagnosis results.

NOTE:
If DTC is displayed along with DTC U1000 or U1010, first diagnose the DTC U1000 or U1010. Refer to HAC-42, "DTC Logic" or HAC-43, "DTC Logic".

Is any DTC displayed?

YES >> Perform the diagnosis that is applicable to the sensor and actuator. Refer to HAC-85, "DTC Index".
NO >> GO TO 2.

2. CHECK TX (A/C CONTROL → A/C AUTO AMP.) CIRCUIT CONTINUITY

1. Disconnect the A/C control and the A/C auto amp. connector.
2. Check continuity between A/C control harness connector and A/C auto amp. harness connector.

A/C control		A/C auto amp.		Continuity
Connector	Terminal	Connector	Terminal	
M95	4	M50	7	Existed

3. Check continuity between A/C control harness connector and ground.

A/C control		—	Continuity
Connector	Terminal		
M95	4	Ground	Not existed

Is the inspection result normal?

YES >> GO TO 3.
NO >> Repair harness or connector.

3. CHECK RX (A/C AUTO AMP. → A/C CONTROL) CIRCUIT CONTINUITY

1. Disconnect the A/C control and the A/C auto amp. connector.
2. Check continuity between A/C control harness connector and A/C auto amp. harness connector.

A/C control		A/C auto amp.		Continuity
Connector	Terminal	Connector	Terminal	
M95	3	M50	6	Existed

3. Check continuity between A/C control harness connector and ground.

A/C control		—	Continuity
Connector	Terminal		
M95	3	Ground	Not existed

Is the inspection result normal?

YES >> Perform trouble diagnosis for the A/C control. Refer to HAC-65, "A/C CONTROL : Diagnosis Procedure".
NO >> Repair harness or connector.

ECU DIAGNOSIS

A/C AUTO AMP.

Reference Value

INFOID:0000000003846375

VALUES ON THE DIAGNOSIS TOOL

CONSULT-III MONITOR ITEM

Monitor item	Condition		Value/Status
COMP REQ SIG	Engine: Run at idle after warming up	A/C switch: ON (Compressor operation status)	On
		A/C switch: OFF	Off
FAN REQ SIG	Engine: Run at idle after warming up	Blower fan: ON	On
		Blower fan: OFF	Off
AMB TEMP SEN	Ignition switch ON	—	–30 - 55°C (–22 - 131°F)
IN-VEH TEMP	Ignition switch ON	—	–30 - 55°C (–22 - 131°F)
INT TEMP SEN	Ignition switch ON	—	–30 - 55°C (–22 - 131°F)
SUNLOAD SEN	Ignition switch ON	—	0 - 1045 W/m^2 (0 - 900 kcal/m^2·h)
AMB SEN CAL	Ignition switch ON	—	–30 - 55°C (–22 - 131°F)
IN-VEH CAL	Ignition switch ON	—	–30 - 55°C (–22 - 131°F)
INT TEMP CAL	Ignition switch ON	—	–30 - 55°C (–22 - 131°F)
SUNL SEN CAL	Ignition switch ON	—	0 - 1045 W/m^2 (0 - 900 kcal/m^2·h)
FAN DUTY	Engine: Run at idle after warming up	Blower fan: ON	21 - 91%
		Blower fan: OFF	0%
XM	Ignition switch ON	—	–100 - 150°
ENG COOL TEMP	Ignition switch ON	—	Values according to coolant temperature
VEHICLE SPEED	Driving	—	Equivalent to speedometer reading

TERMINAL LAYOUT

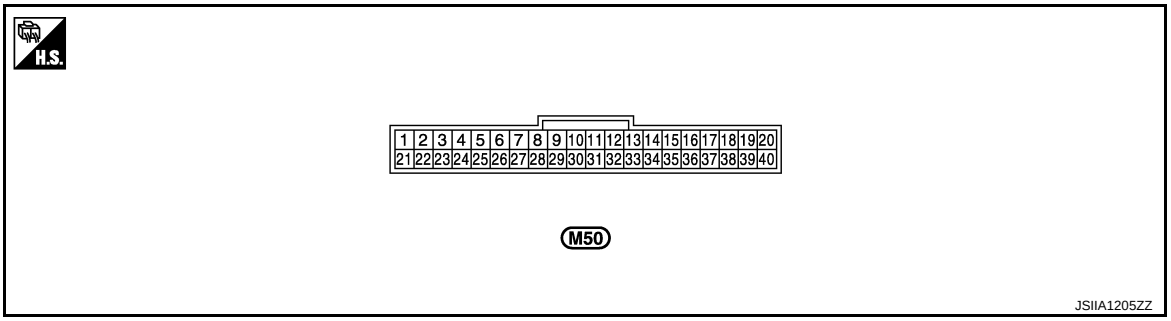

PHYSICAL VALUES

Terminal No. (Wire color)		Description		Condition	Value (Approx.)
+	–	Signal name	Input/ Output		
6 (L)	Ground	TX (AMP > SW·DISP)	Input	—	—
7 (P)	Ground	RX (SW > AMP)	Output	—	—
10 (L/R)	Ground	LAN signal	Input/ Output	—	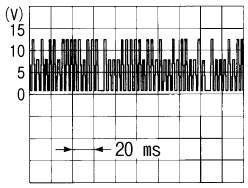 SJIA1453J
11 (L/W)	Ground	Power supply for each door motor	Input	Ignition switch ON	Battery voltage
15 (O)	Ground	Sunload sensor signal	Input	—	—
16 (R/G)	Ground	Intake sensor signal	Input	—	—
17 (V/W)	Ground	ACC Power supply	—	Ignition switch ACC	Battery voltage
19 (B)	Ground	Ground	—	Ignition switch ON	0 V
20 (G/W)	Ground	IGN Power supply	—	Ignition switch ON	Battery voltage
26 (GR)	Ground	Rear window defogger feed-back signal	Input	Rear window defogger switch: OFF	0 V
				Rear window defogger switch: ON	12 V
27 (GR/W)	Ground	Rear window defogger ON signal	Output	—	12 V
				When rear window defogger switch is pushed.	0 V
32 (L/Y)	Ground	Blower motor control signal	Output	• Ignition switch ON • Blower speed: 1st speed (manual)	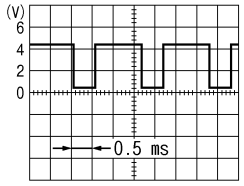 JSIIA0096ZZ
34 (P)	Ground	A/C auto amp. connection recognition signal	Output	Ignition switch ON	5V
35 (O/B)	Ground	Ambient sensor signal	Input	—	—
36 (LG)	Ground	In-vehicle sensor signal	Input	—	—
37 (B/Y)	Ground	Sensor ground	—	Ignition switch ON	0 V
39 (B)	Ground	Ground	—	Ignition switch ON	0 V
40 (Y/R)	Ground	BATT Power supply	—	Ignition switch OFF	Battery voltage

Wiring Diagram - AIR CONDITIONER CONTROL SYSTEM -

INFOID:0000000003846376

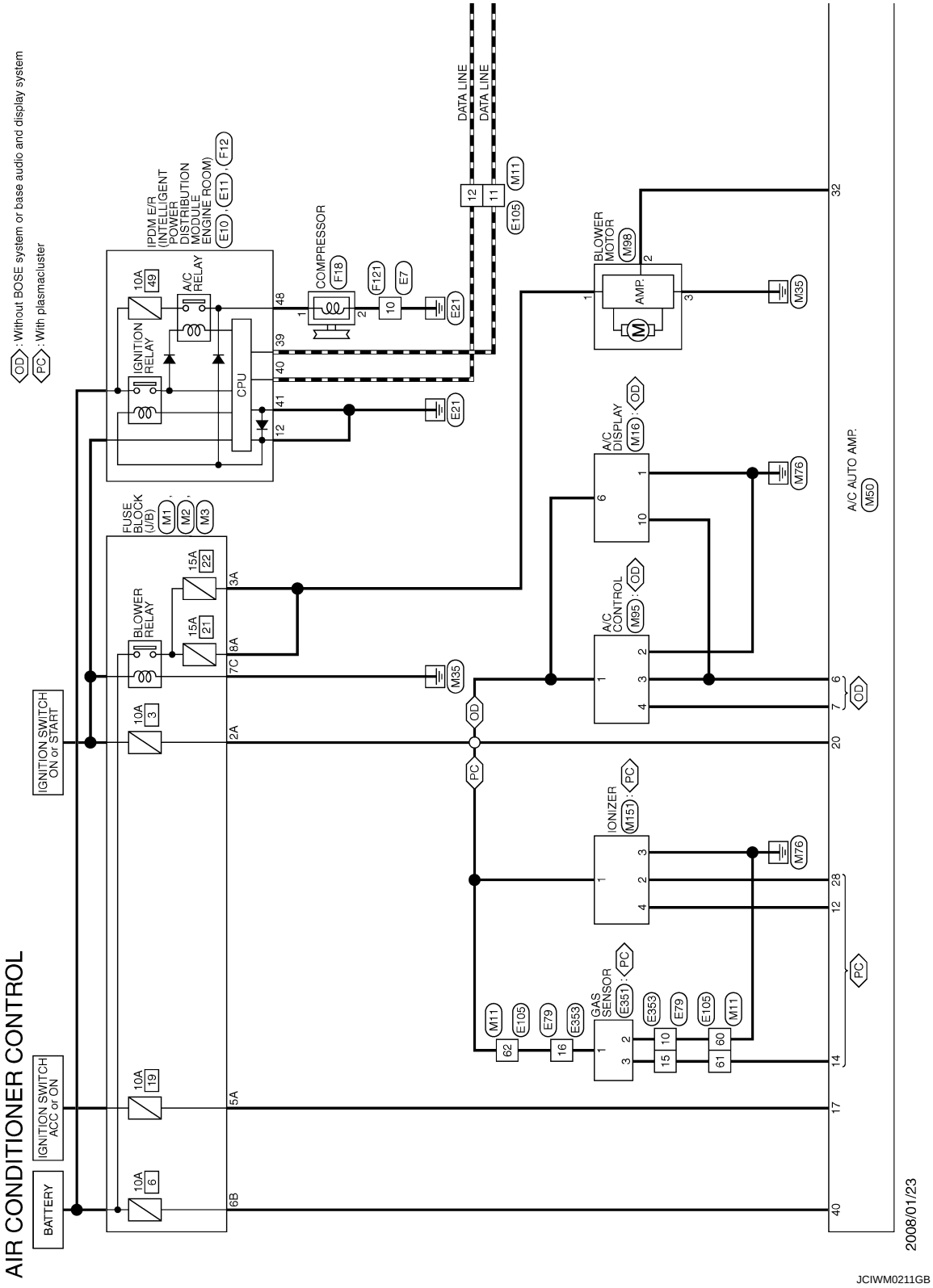

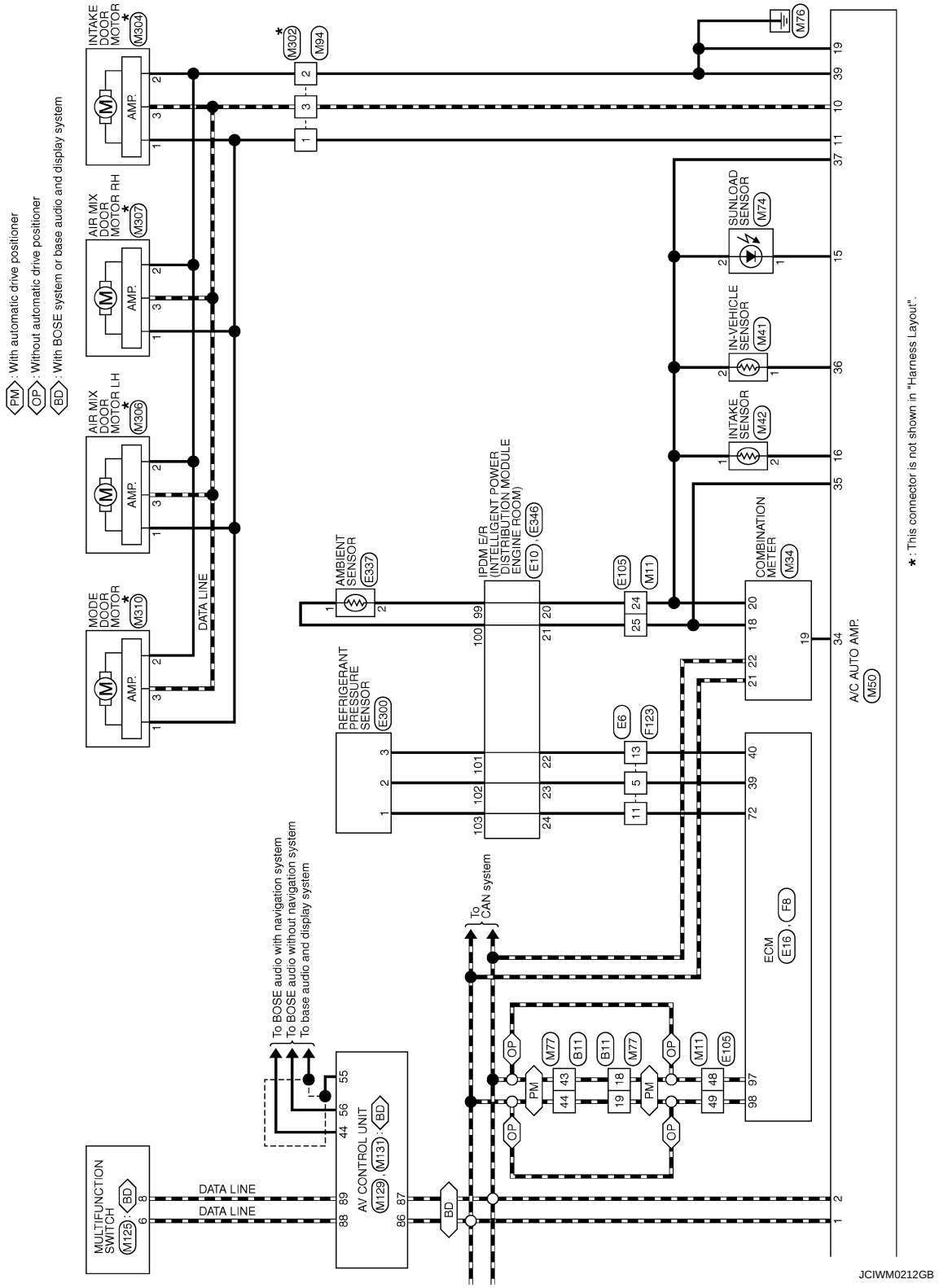
PM : With automatic drive positioner
OP : Without automatic drive positioner
BD : With BOSE system or base audio and display system
INTAKE DOOR MOTOR ★ M304
AIR MIX DOOR MOTOR RH ★ M307
AIR MIX DOOR MOTOR LH ★ M306
MODE DOOR MOTOR ★ M310
AMP.
DATA LINE
M302 ★
M94
M76
SUNLOAD SENSOR M74
IN-VEHICLE SENSOR M41
INTAKE SENSOR M42
AMBIENT SENSOR E37
IPDM E/R (INTELLIGENT POWER DISTRIBUTION MODULE ENGINE ROOM) E10, E346
E105
M11
COMBINATION METER M34
A/C AUTO AMP. M50
REFRIGERANT PRESSURE SENSOR E300
E6
F123
ECM E16, F8
To CAN system
To BOSE audio with navigation system
To BOSE audio without navigation system
To base audio and display system
MULTIFUNCTION SWITCH M125 : BD
AV CONTROL UNIT M129, M131 : BD
M77
B11
★ : This connector is not shown in "Harness Layout".
JCIWM0212GB

AIR CONDITIONER CONTROL

Connector No.	B11
Connector Name	WIRE TO WIRE
Connector Type	TH80MW-CS19

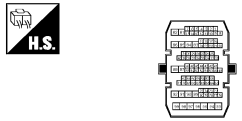

Terminal No.	Color of Wire	Signal Name [Specification]
18	P	–
19	L	–
43	P	–
44	L	–

Connector No.	E6
Connector Name	WIRE TO WIRE
Connector Type	TK16MGY-1V

Terminal No.	Color of Wire	Signal Name [Specification]
5	GR	–
11	G	–
13	SB	–

Connector No.	E7
Connector Name	WIRE TO WIRE
Connector Type	NS10MW-CS

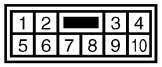

Terminal No.	Color of Wire	Signal Name [Specification]
10	B/W	–

Connector No.	E10
Connector Name	IPDM E/R (INTELLIGENT POWER DISTRIBUTION MODULE ENGINE ROOM)
Connector Type	TH20FW-CS12-M4-1V

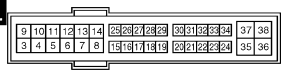

Terminal No.	Color of Wire	Signal Name [Specification]
12	B/W	–
20	B	–
21	O	–
22	SB	–
23	GR	–
24	G	–

Connector No.	E11
Connector Name	IPDM E/R (INTELLIGENT POWER DISTRIBUTION MODULE ENGINE ROOM)
Connector Type	TH08FW-NH

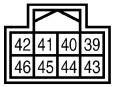

Terminal No.	Color of Wire	Signal Name [Specification]
39	P	–
40	L	–
41	B	–

Connector No.	E16
Connector Name	ECM
Connector Type	RH24FB-RZ8-L-LH

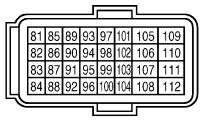

Terminal No.	Color of Wire	Signal Name [Specification]
97	P	VEHCAN-L
98	L	VEHCAN-H

Connector No.	E79
Connector Name	WIRE TO WIRE
Connector Type	TK20MW

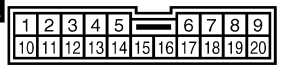

Terminal No.	Color of Wire	Signal Name [Specification]
10	LG	–
15	L	–
16	BR	–

Connector No.	E105
Connector Name	WIRE TO WIRE
Connector Type	TH70MW-CS10-M3

Terminal No.	Color of Wire	Signal Name [Specification]
11	P	–
12	L	–
24	B	–
25	O	–
48	P	–
49	L	–
60	LG	–
61	L	–
62	BR	–

JCIWM0213GB

AIR CONDITIONER CONTROL

Connector No.	E300
Connector Name	REFRIGERANT PRESSURE SENSOR
Connector Type	RK03FB

Terminal No.	Color of Wire	Signal Name [Specification]
1	P	–
2	R	–
3	GR	–

Connector No.	E337
Connector Name	AMBIENT SENSOR
Connector Type	RS02FB

Terminal No.	Color of Wire	Signal Name [Specification]
1	SB	–
2	W	–

Connector No.	E346
Connector Name	IPDM E/R (INTELLIGENT POWER DISTRIBUTION MODULE ENGINE ROOM)
Connector Type	TH16FW-NH

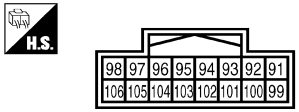

Terminal No.	Color of Wire	Signal Name [Specification]
99	W	–
100	SB	–
101	GR	–
102	R	–
103	P	–

Connector No.	E351
Connector Name	GAS SENSOR
Connector Type	RH03FB

Terminal No.	Color of Wire	Signal Name [Specification]
1	O	–
2	BR	–
3	G	–

Connector No.	E353
Connector Name	WIRE TO WIRE
Connector Type	TK20FW

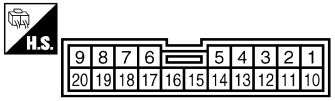

Terminal No.	Color of Wire	Signal Name [Specification]
10	BR	–
15	G	–
16	O	–

Connector No.	F8
Connector Name	ECM
Connector Type	RH40FBR-RZ8-L-LH

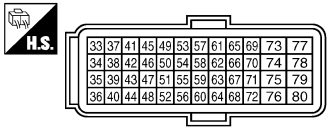

Terminal No.	Color of Wire	Signal Name [Specification]
39	R	PDPRES
40	G	GNDA-PDPRES
72	BR/W	AVCC2-PDPRES

Connector No.	F12
Connector Name	IPDM E/R (INTELLIGENT POWER DISTRIBUTION MODULE ENGINE ROOM)
Connector Type	TH20FW-CS12-M4

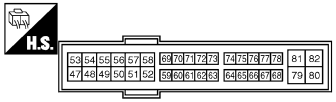

Terminal No.	Color of Wire	Signal Name [Specification]
48	Y/R	–

Connector No.	F18
Connector Name	COMPRESSOR
Connector Type	RH02FB

Terminal No.	Color of Wire	Signal Name [Specification]
1	W	–
2	B	–

JCIWM0214GB

AIR CONDITIONER CONTROL

Connector No.	F121
Connector Name	WIRE TO WIRE
Connector Type	NS10FW-CS

H.S.

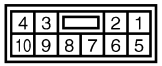

Terminal No.	Color of Wire	Signal Name [Specification]
10	B	–

Connector No.	F123
Connector Name	WIRE TO WIRE
Connector Type	TK16FGY-1V

H.S.

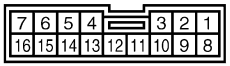

Terminal No.	Color of Wire	Signal Name [Specification]
5	R	–
11	BR/W	–
13	G	–

Connector No.	M1
Connector Name	FUSE BLOCK (J/B)
Connector Type	NS06FW-M2

H.S.

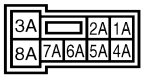

Terminal No.	Color of Wire	Signal Name [Specification]
2A	G/O	–
3A	W/L	–
5A	V/O	–
8A	W/L	–

Connector No.	M2
Connector Name	FUSE BLOCK (J/B)
Connector Type	NS10FW-CS

H.S.

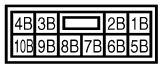

Terminal No.	Color of Wire	Signal Name [Specification]
6B	Y/R	–

Connector No.	M3
Connector Name	FUSE BLOCK (J/B)
Connector Type	NS12FW-CS

H.S.

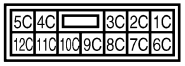

Terminal No.	Color of Wire	Signal Name [Specification]
7C	B/P	–

Connector No.	M11
Connector Name	WIRE TO WIRE
Connector Type	TH70FW-CS10-M3

H.S.

Terminal No.	Color of Wire	Signal Name [Specification]
11	P	–
12	L	–
24	B/Y	–
25	O/B	–
48	P	–
49	L	–
60	B	–
61	G	–
62	G	–

Connector No.	M16
Connector Name	A/C DISPLAY
Connector Type	TH10FB-NH

H.S.

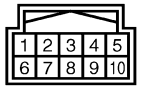

Terminal No.	Color of Wire	Signal Name [Specification]
1	B	GND
6	G	IGN
10	L	RX(AMP>DISP)

Connector No.	M34
Connector Name	COMBINATION METER
Connector Type	TH40FW-NH

H.S.

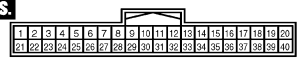

Terminal No.	Color of Wire	Signal Name [Specification]
18	O/B	AMBIENT SENSOR SIGNAL
19	P	A/C AUTO AMP. CONNECTION RECOGNITION SIGNAL
20	B/Y	AMBIENT SENSOR GROUND
21	L	CAN-H
22	P	CAN-L

JCIWM0215GB

AIR CONDITIONER CONTROL

Connector No.	M41
Connector Name	IN-VEHICLE SENSOR
Connector Type	A02FW

Terminal No.	Color of Wire	Signal Name [Specification]
1	LG	–
2	B/Y	–

Connector No.	M42
Connector Name	INTAKE SENSOR
Connector Type	C02FW

Terminal No.	Color of Wire	Signal Name [Specification]
1	B/Y	–
2	R/G	–

Connector No.	M50
Connector Name	A/C AUTO AMP.
Connector Type	SAB40FW

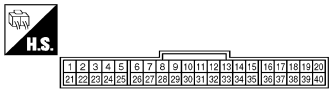

Terminal No.	Color of Wire	Signal Name [Specification]
1	L	CAN-H
2	P	CAN-L
6	L	TX(AMP>SW&DISP)
7	P	RX(SW>AMP)
10	L/R	LAN SIGNAL
11	L/W	POWER SUPPLY FOR EACH DOOR MOTOR
12	O	ION ON/OFF SIGNAL
14	G	GAS SENSOR SIGNAL
15	O	SUNLOAD SENSOR SIGNAL
16	R/G	INTAKE SENSOR SIGNAL
17	V/W	ACC POWER SUPPLY
19	B	GROUND
20	G/W	IGN POWER SUPPLY
28	G/Y	ION CONTROL MODE OUTPUT SIGNAL
32	L/Y	BLOWER MOTOR CONTROL SIGNAL
34	P	A/C AUTO AMP. CONNECTION RECOGNITION SIGNAL
35	O/B	AMBIENT SENSOR SIGNAL
36	LG	IN-VEHICLE SENSOR SIGNAL
37	B/Y	SENSOR GND
39	B	GROUND
40	Y/R	BAT POWER SUPPLY

Connector No.	M74
Connector Name	SUNLOAD SENSOR
Connector Type	K02FB

Terminal No.	Color of Wire	Signal Name [Specification]
1	O	–
2	B/Y	–

Connector No.	M77
Connector Name	WIRE TO WIRE
Connector Type	TH80FW-CS19

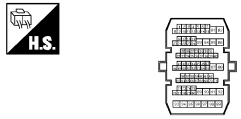

Terminal No.	Color of Wire	Signal Name [Specification]
18	P	–
19	L	–
43	P	–
44	L	–

Connector No.	M94
Connector Name	WIRE TO WIRE
Connector Type	A03MW

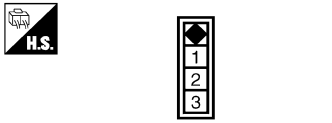

Terminal No.	Color of Wire	Signal Name [Specification]
1	L/W	–
2	B	–
3	L/R	–

Connector No.	M95
Connector Name	A/C CONTROL
Connector Type	TH12FW-NH

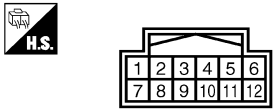

Terminal No.	Color of Wire	Signal Name [Specification]
1	G/W	IGN
2	B	GND
3	L	RX(AMP>SW)
4	P	TX(SW>AMP)

AIR CONDITIONER CONTROL

Connector No.	M98
Connector Name	BLOWER MOTOR
Connector Type	NS03FW-M3

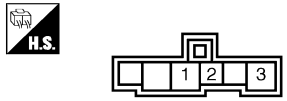

Terminal No.	Color of Wire	Signal Name [Specification]
1	W/L	–
2	L/Y	–
3	B	–

Connector No.	M125
Connector Name	MULTIFUNCTION SWITCH
Connector Type	TH16FW-NH

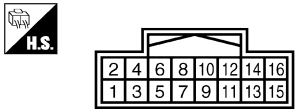

Terminal No.	Color of Wire	Signal Name [Specification]
6	W	M-CAN H
8	B	M-CAN L

Connector No.	M129
Connector Name	AV CONTROL UNIT
Connector Type	TH24FW-NH

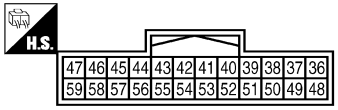

Terminal No.	Color of Wire	Signal Name [Specification]
44	G	COMM (DISP->CONT)
55	SHIELD	SHIELD
56	R	COMM (CONT->DISP)

Connector No.	M131
Connector Name	AV CONTROL UNIT
Connector Type	TH32FW-NH

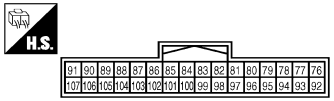

Terminal No.	Color of Wire	Signal Name [Specification]
86	L	CAN-H
87	P	CAN-L
88	W	AV COMM (H)
89	B	AV COMM (L)

Connector No.	M151
Connector Name	IONIZER
Connector Type	TH04FW-NH

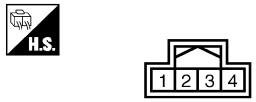

Terminal No.	Color of Wire	Signal Name [Specification]
1	G/W	IGN
2	G/Y	ION-MODE
3	B	GND
4	O	ION-ON/OFF

Connector No.	M302
Connector Name	WIRE TO WIRE
Connector Type	A03FW

Terminal No.	Color of Wire	Signal Name [Specification]
1	–	–
2	–	–
3	–	–

Connector No.	M304
Connector Name	INTAKE DOOR MOTOR
Connector Type	A03FW

Terminal No.	Color of Wire	Signal Name [Specification]
1	–	–
2	–	–
3	–	–

Connector No.	M306
Connector Name	AIR MIX DOOR MOTOR LH
Connector Type	A03FW

Terminal No.	Color of Wire	Signal Name [Specification]
1	–	–
2	–	–
3	–	–

JCIWM0217GB

AIR CONDITIONER CONTROL

Connector No.	M307
Connector Name	AIR MIX DOOR MOTOR RH
Connector Type	A03FW

Terminal No.	Color of Wire	Signal Name [Specification]
1	–	–
2	–	–
3	–	–

Connector No.	M310
Connector Name	MODE DOOR MOTOR
Connector Type	A03FW

Terminal No.	Color of Wire	Signal Name [Specification]
1	–	–
2	–	–
3	–	–

JCIWM0218GB

Fail-Safe

INFOID:0000000003926389

FAIL-SAFE FUNCTION

If a communication error exists between the A/C auto amp. and A/C control for 30 seconds or longer, air conditioner is controlled under the following conditions:

Compressor	**: ON**
Air outlet	**: AUTO**
Air inlet	**: FRE (Fresh)**
Blower fan speed	**: AUTO**
Set temperature	**: Setting before communication error occurs**

DTC Inspection Priority Chart

INFOID:0000000003846377

If some DTCs are displayed at the same time, perform inspections one by one based on the following priority chart.

Priority	Detected items (DTC)
1	• U1000: CAN COMM CIRCUIT • U1010: CONTROL UNIT (CAN)
2	• B257B: AMB TEMP SEN (SHORT) • B257C: AMB TEMP SEN (OPEN) • B2578: IN CAR SENSOR (OUT OF RANGE [LOW]) • B2579: IN CAR SENSOR (OUT OF RANGE [HI]) • B2581: EVAP TEMP SEN (SHORT) • B2582: EVAP TEMP SEN (OPEN) • B2630: SUNLOAD SEN (SHORT) • B2631: SUNLOAD SEN (OPEN) • B2632: DR AIRMIX ACTR (SHORT) • B2633: DR AIRMIX ACTR (OPEN) • B2634: PASS AIRMIX ACTR (SHORT) • B2635: PASS AIRMIX ACTR (OPEN) • B2636: DR VENT DOOR FAIL • B2637: DR B/L DOOR FAIL • B2638: DR D/F1 DOOR FAIL • B2639: DR DEF DOOR FAIL • B263D: FRE DOOR FAIL • B263E: 20P FRE DOOR FAIL • B263F: REC DOOR FAIL • B2654: D/F2 DOOR FAIL • B2655: B/L2 DOOR FAIL • B2656: BTC FRE DOOR FAIL

DTC Index

INFOID:0000000003846378

DTC	Items (CONSULT-III screen terms)	Reference
U1000	CAN COMM CIRCUIT	HAC-42, "DTC Logic"
U1010	CONTROL UNIT (CAN)	HAC-43, "DTC Logic"
B257B	AMB TEMP SEN (SHORT)	HAC-44, "DTC Logic"
B257C	AMB TEMP SEN (OPEN)	HAC-44, "DTC Logic"
B2578	IN CAR SENSOR (OUT OF RANGE [LOW])	HAC-47, "DTC Logic"
B2579	IN CAR SENSOR (OUT OF RANGE [HI])	HAC-47, "DTC Logic"
B2581	EVAP TEMP SEN (SHORT)	HAC-50, "DTC Logic"
B2582	EVAP TEMP SEN (OPEN)	HAC-50, "DTC Logic"
B2630*	SUNLOAD SEN (SHORT)	HAC-53, "DTC Logic"
B2631*	SUNLOAD SEN (OPEN)	HAC-53, "DTC Logic"
B2632	DR AIRMIX ACTR (SHORT)	HAC-56, "DTC Logic"
B2633	DR AIRMIX ACTR (OPEN)	HAC-56, "DTC Logic"
B2634	PASS AIRMIX ACTR (SHORT)	HAC-58, "DTC Logic"

DTC	Items (CONSULT-III screen terms)	Reference
B2635	PASS AIRMIX ACTR (OPEN)	HAC-58, "DTC Logic"
B2636	DR VENT DOOR FAIL	HAC-60, "DTC Logic"
B2637	DR B/L DOOR FAIL	HAC-60, "DTC Logic"
B2638	DR D/F1 DOOR FAIL	HAC-60, "DTC Logic"
B2639	DR DEF DOOR FAIL	HAC-60, "DTC Logic"
B263D	FRE DOOR FAIL	HAC-63, "DTC Logic"
B263E	20P FRE DOOR FAIL	HAC-63, "DTC Logic"
B263F	REC DOOR FAIL	HAC-63, "DTC Logic"
B2654	D/F2 DOOR FAIL	HAC-60, "DTC Logic"
B2655	B/L2 DOOR FAIL	HAC-60, "DTC Logic"
B2656	BTC FRE DOOR FAIL	HAC-63, "DTC Logic"

*: Perform self-diagnosis under sunshine. When performing indoors, aim a light (more than 60 W) at sunload sensor, otherwise self-diagnosis indicates even though the sunload sensor is functioning normally.

SYMPTOM DIAGNOSIS

AIR CONDITIONER CONTROL

Diagnosis Chart By Symptom

INFOID:0000000003846383

Symptom	Reference	
A/C system does not activate.	Go to Trouble Diagnosis Procedure for A/C Control Signal Circuit.	HAC-74, "Diagnosis Procedure"
A/C display dose not work.	Go to Trouble Diagnosis Procedure for A/C Display.	HAC-66, "A/C DISPLAY : Diagnosis Procedure"
Air outlet does not change.	Go to Trouble Diagnosis Procedure for Mode Door Motor. (LAN)	HAC-61, "Diagnosis Procedure"
Mode door motor does not operate normally.		
Discharge air temperature does not change.	Go to Trouble Diagnosis Procedure for Air Mix Door Motor. (LAN)	HAC-57, "Diagnosis Procedure" (driver side) or HAC-59, "Diagnosis Procedure" (passenger side)
Air mix door motor does not operate normally.		
Intake door does not change.	Go to Trouble Diagnosis Procedure for Intake Door Motor. (LAN)	HAC-64, "Diagnosis Procedure"
Intake door motor does not operate normally.		
Blower motor operation is malfunctioning.	Go to Trouble Diagnosis Procedure for Blower Motor.	HAC-68, "Diagnosis Procedure"
Magnet clutch does not engage.	Go to Trouble Diagnosis Procedure for Magnet Clutch.	HAC-72, "Diagnosis Procedure"
Insufficient cooling	Go to Trouble Diagnosis Procedure for Insufficient Cooling.	HAC-88, "Inspection procedure"
No cool air comes out. (Air flow volume is normal.)		
Insufficient heating	Go to Trouble Diagnosis Procedure for Insufficient Heating.	HAC-91, "Inspection procedure"
No warm air comes out. (Air flow volume is normal.)		
Noise	Go to Trouble Diagnosis Procedure for Noise.	HAC-94, "Inspection procedure"
Memory function does not operate.	Go to Trouble Diagnosis Procedure for Memory Function.	HAC-96, "Inspection procedure"

INSUFFICIENT COOLING

Description

INFOID:0000000003846386

Symptom
- Insufficient cooling
- No cool air comes out. (Air flow volume is normal.)

Inspection procedure

INFOID:0000000003846387

1. CHECK WITH A GAUGE OF RECOVERY/RECYCLING RECHARGING EQUIPMENT

Connect the recovery/recycling recharging equipment to the vehicle and perform the pressure inspection with the gauge.

Is there refrigerant?

YES >> GO TO 2.
NO-1 >> Check for refrigerant leakages with the refrigerant leakage detecting fluorescent leak detector. Refer to HA-32, "Inspection".
NO-2 >> GO TO 2 after repairing or replacing the parts according to the inspection results.

2. CHECK CHARGED REFRIGERANT AMOUNT

1. Connect recovery/recycling recharging equipment to the vehicle and discharge the refrigerant.
2. Recharge with the proper amount of refrigerant and perform the inspection with the refrigerant leakage detecting fluorescent leak detector. Refer to HA-32, "Inspection".

Is the inspection result normal?

YES >> GO TO 3.
NO >> Refill the refrigerant and repair or replace the parts according to the inspection results.

3. CHECK REFRIGERANT CYCLE PRESSURE

Connect recovery/recycling recharging equipment to the vehicle and perform the performance test. Refer to HA-30, "Performance Chart".

Is the inspection result normal?

YES >> GO TO 4.
NO >> Perform the diagnosis with the gauge pressure. Refer to HA-8, "Trouble Diagnosis For Unusual Pressure".

4. CHECK SETTING OF TEMPERATURE SETTING TRIMMER

Using CONSULT-III, check the setting of “TEMP SET CORRECT” on “WORK SUPPORT” of HVAC. Refer to HAC-10, "Temperature Setting Trimmer".

1. Check that the temperature setting trimmer is set to “+ direction”.
   NOTE:
   The control temperature can be set with the setting of the temperature setting trimmer.
2. Set temperature control switch to “0”.

Are the malfunction solved?

YES >> Perform the setting separately if necessary. END.
NO >> GO TO 5.

5. CHECK WITH SELF-DIAGNOSIS FUNCTION OF CONSULT-III

1. Using CONSULT-III, perform “SELF-DIAGNOSIS RESULTS” of HVAC.
2. Check if any DTC is displayed in the trouble diagnosis results.
   NOTE:
   If DTC is displayed along with DTC U1000 or U1010, first diagnose the DTC U1000 or U1010. Refer to HAC-42, "DTC Logic" or HAC-43, "DTC Logic".

Is any DTC displayed?

YES >> Perform the diagnosis that is applicable to the sensor and the door motor. Refer to HAC-85, "DTC Index".
NO >> GO TO 6.

6. CHECK WITH ACTIVE TEST OF CONSULT-III

1. Using CONSULT-III, perform “HVAC TEST” “ACTIVE TEST” of HVAC to check each output device. Refer to HAC-38, "CONSULT-III Function".
   NOTE:
   Perform the ACTIVE TEST after starting the engine because the compressor is operated.
2. Refer to the table and check the outlet, inlet, air flow temperature, blower motor control signal, magnet clutch operation, and air mix ratio. Visually check each operating condition, by listening for noise, touching air outlets with a hand, etc.

	Test item						
	MODE 1	MODE 2	MODE 3	MODE 4	MODE 5	MODE 6	MODE 7
Mode door position	VENT	B/L1	B/L2	AUTO FOOT	D/F	DEF	-
Intake door position	REC	REC	20% FRE	FRE	FRE	FRE	-
Air mix door position (driver & passenger side)	FULL COLD	FULL COLD	FULL HOT	FULL HOT	FULL HOT	FULL HOT	-
Blower motor duty ratio	37%	91%	65%	65%	65%	91%	-
Compressor (Magnet clutch)	ON	ON	OFF	OFF	ON	ON	-

NOTE:
- Perform the inspection of each output device after starting the engine because the compressor is operated.
- When choosing to “MODE 7”, error message is displayed but it is not malfunction.

Discharge air flow						
Mode position indication	Condition	Air outlet/distribution				
		VENT		FOOT		DEF
		Front	Rear	Front	Rear	
	DUAL switch: OFF Rear ventilator : OPEN	89%	11%	—	—	—
		46%	17%	27%	10%	—
		14%	16%	34%	14%	22%
		12%	16%	27%	13%	32%
		11%	12%	—	—	77%

JPIIA0877GB

Does it operate normally?

YES >> GO TO 7.
NO-1 >> Air outlet does not change. Refer to HAC-61, "Diagnosis Procedure".
NO-2 >> Air inlet does not change. Refer to HAC-64, "Diagnosis Procedure".
NO-3 >> Discharge air temperature does not change (driver side). Refer to HAC-57, "Diagnosis Procedure".
NO-4 >> Discharge air temperature does not change (passenger side). Refer to HAC-59, "Diagnosis Procedure".
NO-5 >> Blower motor does not operate normally. Refer to HAC-68, "Diagnosis Procedure".
NO-6 >> Magnet clutch does not operate. Refer to HAC-72, "Diagnosis Procedure".

7. CHECK DRIVE BELT

Check tension of the drive belt. Refer to EM-12, "Checking".

Is the inspection result normal?

YES >> GO TO 8.
NO >> Adjust or replace drive belt.

8. CHECK AIR LEAKAGE FROM DUCT

Check duct and nozzle, etc, of the A/C system for air leakage.

Is the inspection result normal?

YES >> INSPECTION END
NO >> Repair or replace parts according to the inspection results.

INSUFFICIENT HEATING

Description

INFOID:0000000003846388

Symptom
- Insufficient heating
- No warm air comes out. (Air flow volume is normal.)

Inspection procedure

INFOID:0000000003846389

1. CHECK COOLING SYSTEM

1. Check engine coolant level and check for leakage. Refer to CO-8, "Inspection".
2. Check radiator cap. Refer to CO-12, "RADIATOR CAP : Inspection".
3. Check water flow sounds of engine coolant. Refer to CO-9, "Refilling".

Is the inspection result normal?

YES >> GO TO 2.
NO >> Refill the engine coolant and repair or replace the parts according to the inspection results.

2. CHECK OPERATION

1. Press temperature control switch (driver side) and raise temperature setting to 32°C (90°F) after warming up the engine.
2. Check that warm air blows from the outlets.

Is the inspection result normal?

YES >> END.
NO >> GO TO 3.

3. CHECK SETTING OF TEMPERATURE SETTING TRIMMER

Using CONSULT-III, check the setting of “TEMP SET CORRECT” on “WORK SUPPORT” of HVAC. Refer to HAC-10, "Temperature Setting Trimmer".

1. Check that the temperature setting trimmer is set to “– direction”.
   NOTE:
   The control temperature can be set by the temperature setting trimmer.
2. Set temperature control switch to “0”.

Are the malfunction solved?

YES >> Perform the setting separately if necessary. END.
NO >> GO TO 4.

4. CHECK WITH SELF-DIAGNOSIS FUNCTION OF CONSULT-III

1. Using CONSULT-III, perform “SELF-DIAGNOSIS RESULTS” of HVAC.
2. Check if any DTC is displayed in the trouble diagnosis results.
   NOTE:
   If DTC is displayed along with DTC U1000 or U1010, first diagnose the DTC U1000 or U1010. Refer to HAC-42, "DTC Logic" or HAC-43, "DTC Logic".

Is any DTC displayed?

YES >> Perform the diagnosis that is applicable to the sensor and the door motor. Refer to HAC-85, "DTC Index".
NO >> GO TO 5.

5. CHECK WITH ACTIVE TEST OF CONSULT-III

1. Using CONSULT-III, perform “HVAC TEST” in “ACTIVE TEST” of HVAC to check each output device. Refer to HAC-38, "CONSULT-III Function".
   NOTE:
   Perform the ACTIVE TEST after starting the engine because the compressor is operated.
2. Refer to the table and check the outlet, inlet, air flow temperature, blower motor control signal, magnet clutch operation, and air mix ratio. Visually check each operating condition, by listening for noise, touching air outlets with a hand, etc.

	Test item						
	MODE 1	MODE 2	MODE 3	MODE 4	MODE 5	MODE 6	MODE 7
Mode door position	VENT	B/L1	B/L2	AUTO FOOT	D/F	DEF	-
Intake door position	REC	REC	20% FRE	FRE	FRE	FRE	-
Air mix door position (driver & passenger side)	FULL COLD	FULL COLD	FULL HOT	FULL HOT	FULL HOT	FULL HOT	-
Blower motor duty ratio	37%	91%	65%	65%	65%	91%	-
Compressor (Magnet clutch)	ON	ON	OFF	OFF	ON	ON	-

NOTE:
- Perform the inspection of each output device after starting the engine because the compressor is operated.
- When choosing to “MODE 7”, error message is displayed but it is not malfunction.

Discharge air flow						
Mode position indication	Condition	Air outlet/distribution				
		VENT		FOOT		DEF
		Front	Rear	Front	Rear	
	DUAL switch: OFF Rear ventilator : OPEN	89%	11%	—	—	—
		46%	17%	27%	10%	—
		14%	16%	34%	14%	22%
		12%	16%	27%	13%	32%
		11%	12%	—	—	77%

JPIIA0877GB

Does it operate normally?

YES >> GO TO 6.
NO-1 >> Air outlet does not change. Refer to HAC-61, "Diagnosis Procedure".
NO-2 >> Air inlet does not change. Refer to HAC-64, "Diagnosis Procedure".
NO-3 >> Discharge air temperature does not change (driver side). Refer to HAC-57, "Diagnosis Procedure".
NO-4 >> Discharge air temperature does not change (passenger side). Refer to HAC-59, "Diagnosis Procedure".
NO-5 >> Blower motor does not operate normally. Refer to HAC-68, "Diagnosis Procedure".
NO-6 >> Magnet clutch does not operate. Refer to HAC-72, "Diagnosis Procedure".

6. CHECK AIR LEAKAGE FROM DUCT

Check duct and nozzle, etc, of the A/C system for air leakage.

Is the inspection result normal?

YES >> GO TO 7.
NO >> Repair or replace parts according to the inspection results.

7. CHECK HEATER HOSE INSTALLATION CONDITION

Check the heater hose installation condition visually (for twists, crushes, etc.).

Is the inspection result normal?

YES >> GO TO 8.
NO >> Repair or replace parts according to the inspection results.

8. CHECK TEMPERATURE OF HEATER HOSE

1. Check the temperature of inlet hose and outlet hose of heater core.
2. Check that the inlet side of heater core is hot and the outlet side is slightly lower than/almost equal to the inlet side.
   CAUTION:
   Always perform the temperature inspection in a short period of time because the engine coolant temperature is very hot.

Is the inspection result normal?

YES >> GO TO 9.
NO >> Replace the heater core after performing the procedures after the cooling system inspection. GO TO 1.

9. REPLACE HEATER CORE

Replace the heater core. Refer to heater core. Refer to VTL-43, "Exploded View".

Are the malfunction solved?

YES >> END.
NO >> Perform the procedures again after the cooling system inspection. GO TO 1.

NOISE

Description

INFOID:0000000003846390

Symptom
- Noise
- Noise is heard when the A/C system operates.

Inspection procedure

INFOID:0000000003846391

1. CHECK OPERATION

1. Operate the A/C system and check the operation. Refer to HAC-8, "Description & Inspection".
2. Check the parts where noise is occurring.

Can the parts where noise is occurring be checked?

YES-1 >> Noise from blower motor: GO TO 2.
YES-2 >> Noise from compressor: GO TO 3.
YES-3 >> Noise from expansion valve: GO TO 4.
YES-4 >> Noise from A/C piping (pipe, flexible hose): GO TO 6.
YES-5 >> Noise from drive belt: GO TO 7.
NO >> END.

2. CHECK BLOWER MOTOR

1. Remove blower motor.
2. Remove foreign materials that are in the blower unit.
3. Check the noise from blower motor again.

Is the inspection result normal?

YES >> END.
NO >> Replace blower motor.

3. CHECK COMPRESSOR

Perform trouble diagnosis for the compressor and check the compressor. Refer to HA-11, "Symptom Table".

Is the inspection result normal?

YES >> END.
NO >> Refill the refrigerant or replace the compressor according to the inspection results.

4. CHECK WITH GAUGE PRESSURE

Perform the diagnosis with the gauge pressure. Refer to HA-8, "Trouble Diagnosis For Unusual Pressure".

Is the inspection result normal?

YES >> GO TO 5.
NO >> Repair or replace parts according to the inspection results.

5. CHECK EXPANSION VALVE

1. Correct the refrigerant with recovery/recycling recharging equipment.
2. Recharge with the proper amount of the collected refrigerant after recycling or new refrigerant.
3. Check for the noise from expansion valve again.

Are the malfunction solved?

YES >> END.
NO >> Replace expansion valve.

6. CHECK A/C PIPING (PIPE, FLEXIBLE HOSE)

1. Check the A/C piping (pipes, flexible hoses) (for deformation and damage, etc.).
2. Check the installation condition of clips and brackets, etc, of the A/C piping (pipes, flexible hoses).

Is the inspection result normal?

YES >> Fix the line with rubber or come vibration absorbing material.
NO >> Repair or replace parts according to the inspection results.

7. CHECK DRIVE BELT

Check tension of the drive belt. Refer to EM-12, "Checking".

Is the inspection result normal?

YES >> Check the noise from compressor: GO TO 3.
NO >> Adjust or replace drive belt according to the inspection results.

MEMORY FUNCTION DOES NOT OPERATE

Description

INFOID:0000000003846392

Symptom
- Memory function does not operate normally.
- The setting is not maintained. (It returns to the initial condition.)

Inspection procedure

INFOID:0000000003846393

1. CHECK OPERATION

1. Set temperature control switch to 32°C (90°F).
2. Press the OFF switch.
3. Turn the ignition switch OFF.
4. Turn the ignition switch ON.
5. Press the AUTO switch.
6. Check that the set temperature is maintained.

Is the inspection result normal?

YES >> END.
NO >> GO TO 2.

2. CHECK POWER SUPPLY AND GROUND CIRCUIT OF A/C AUTO AMP.

Check power supply and ground circuit of the A/C auto amp. Refer to HAC-65, "A/C AUTO AMP. : Diagnosis Procedure".

Is the inspection result normal?

YES >> Replace the A/C auto amp.
NO >> Repair or replace malfunctioning parts.

PRECAUTION

PRECAUTIONS

Precaution for Supplemental Restraint System (SRS) "AIR BAG" and "SEAT BELT PRE-TENSIONER"

INFOID:0000000003854497

The Supplemental Restraint System such as “AIR BAG” and “SEAT BELT PRE-TENSIONER”, used along with a front seat belt, helps to reduce the risk or severity of injury to the driver and front passenger for certain types of collision. Information necessary to service the system safely is included in the “SRS AIRBAG” and “SEAT BELT” of this Service Manual.

WARNING:

- **To avoid rendering the SRS inoperative, which could increase the risk of personal injury or death in the event of a collision which would result in air bag inflation, all maintenance must be performed by an authorized NISSAN/INFINITI dealer.**
- **Improper maintenance, including incorrect removal and installation of the SRS, can lead to personal injury caused by unintentional activation of the system. For removal of Spiral Cable and Air Bag Module, see the “SRS AIRBAG”.**
- **Never use electrical test equipment on any circuit related to the SRS unless instructed to in this Service Manual. SRS wiring harnesses can be identified by yellow and/or orange harnesses or harness connectors.**

Precaution Necessary for Steering Wheel Rotation after Battery Disconnect

INFOID:0000000003854498

NOTE:

- Before removing and installing any control units, first turn the push-button ignition switch to the LOCK position, then disconnect both battery cables.
- After finishing work, confirm that all control unit connectors are connected properly, then re-connect both battery cables.
- Always use CONSULT-III to perform self-diagnosis as a part of each function inspection after finishing work. If a DTC is detected, perform trouble diagnosis according to self-diagnosis results.

This vehicle is equipped with a push-button ignition switch and a steering lock unit.
If the battery is disconnected or discharged, the steering wheel will lock and cannot be turned.
If turning the steering wheel is required with the battery disconnected or discharged, follow the procedure below before starting the repair operation.

OPERATION PROCEDURE

1. Connect both battery cables.
   NOTE:
   Supply power using jumper cables if battery is discharged.
2. Turn the push-button ignition switch to ACC position.
   (At this time, the steering lock will be released.)
3. Disconnect both battery cables. The steering lock will remain released with both battery cables disconnected and the steering wheel can be turned.
4. Perform the necessary repair operation.
5. When the repair work is completed, re-connect both battery cables. With the brake pedal released, turn the push-button ignition switch from ACC position to ON position, then to LOCK position. (The steering wheel will lock when the push-button ignition switch is turned to LOCK position.)
6. Perform self-diagnosis check of all control units using CONSULT-III.

Precaution for Procedure without Cowl Top Cover

INFOID:0000000003846397

When performing the procedure after removing cowl top cover, cover the lower end of windshield with urethane, etc.

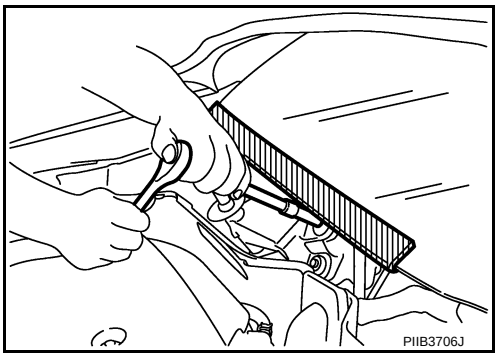

Precautions For Xenon Headlamp Service

INFOID:0000000003846398

WARNING:

Comply with the following warnings to prevent any serious accident.

- **Disconnect the battery cable (negative terminal) or the power supply fuse before installing, removing, or touching the xenon headlamp (bulb included). The xenon headlamp contains high-voltage generated parts.**
- **Never work with wet hands.**
- **Check the xenon headlamp ON-OFF status after assembling it to the vehicle. Never turn the xenon headlamp ON in other conditions. Connect the power supply to the vehicle-side connector. (Turning it ON outside the lamp case may cause fire or visual impairments.)**
- **Never touch the bulb glass immediately after turning it OFF. It is extremely hot.**

CAUTION:

Comply with the following cautions to prevent any error and malfunction.

- **Install the xenon bulb securely. (Insufficient bulb socket installation may melt the bulb, the connector, the housing, etc. by high-voltage leakage or corona discharge.)**
- **Never perform HID circuit inspection with a tester.**
- **Never touch the xenon bulb glass with hands. Never put oil and grease on it.**
- **Dispose of the used xenon bulb after packing it in thick vinyl without breaking it.**
- **Never wipe out dirt and contamination with organic solvent (thinner, gasoline, etc.).**

Working with HFC-134a (R-134a)

INFOID:0000000003846399

CAUTION:

- **CFC-12 (R-12) refrigerant and HFC-134a (R-134a) refrigerant are not compatible. Compressor malfunction is likely to occur if the refrigerants are mixed, refer to “CONTAMINATED REFRIGERANT” below. To determine the purity of HFC-134a (R-134a) in the vehicle and recovery tank, use Refrigerant Recovery/Recycling Recharging equipment and Refrigerant Identifier.**
- **Use only specified lubricant for the HFC-134a (R-134a) A/C system and HFC-134a (R-134a) components. Compressor malfunction is likely to occur if lubricant other than that specified is used.**
- **The specified HFC-134a (R-134a) lubricant rapidly absorbs moisture from the atmosphere. The following handling precautions must be observed:**
- **Immediately cap (seal) the component to minimize the entry of moisture from the atmosphere when removing refrigerant components from a vehicle.**
- **Never remove the caps (unseal) until just before connecting the components when installing refrigerant components to a vehicle. Connect all refrigerant loop components as quickly as possible to minimize the entry of moisture into system.**
- **Use only the specified lubricant from a sealed container. Immediately reseal containers of lubricant. Lubricant becomes moisture saturated and should not be used without proper sealing.**
- **Never allow lubricant (NISSAN A/C System Oil Type S) to come in to contact with styrene foam parts. Damage may result.**

CONTAMINATED REFRIGERANT

Take the appropriate steps shown below if a refrigerant other than pure HFC-134a (R-134a) is identified in a vehicle:

- Explain to the customer that environmental regulations prohibit the release of contaminated refrigerant into the atmosphere.

- Explain that recovery of the contaminated refrigerant could damage service equipment and refrigerant supply.
- Suggest the customer return the vehicle to the location of previous service where the contamination may have occurred.
- If repairing, recover the refrigerant using only **dedicated equipment and containers. Never reintroduce contaminated refrigerant into the existing service equipment.** Contact a local refrigerant product retailer for available service if the facility does not have dedicated recovery equipment. This refrigerant must be disposed of in accordance with all federal and local regulations. In addition, replacement of all refrigerant system components on the vehicle is recommended.
- The air conditioner warranty is void if the vehicle is within the warranty period. Please contact Nissan Customer Affairs for further assistance.

General Refrigerant Precaution

INFOID:0000000003846400

WARNING:

- **Never breath A/C refrigerant, lubricant vapor or mist. Exposure may irritate eyes, nose and throat. Remove HFC-134a (R-134a) from the A/C system, using certified service equipment meeting requirements of SAE J-2210 [HFC-134a (R-134a) recycling equipment], or J-2209 [HFC-134a (R-134a) recovery equipment]. Ventilate work area before resuming service if accidental system discharge occurs. Additional health and safety information may be obtained from refrigerant and lubricant manufacturers.**
- **Never release refrigerant into the air. Use approved recovery/recycling equipment to capture the refrigerant each time an air conditioning system is discharged.**
- **Always wear eye and hand protection (goggles and gloves) when working with any refrigerant or air conditioning system.**
- **Never store or heat refrigerant containers above 52°C (126°F).**
- **Never heat a refrigerant container with an open flame. Place the bottom of the container in a warm pail of water if container warming is required.**
- **Never intentionally drop, puncture, or incinerate refrigerant containers.**
- **Keep refrigerant away from open flames. Poisonous gas is produced if refrigerant burns.**
- **Refrigerant displaces oxygen, therefore be certain to work in well ventilated areas to prevent suffocation.**
- **Never pressure test or leakage test HFC-134a (R-134a) service equipment and/or vehicle air conditioning systems with compressed air during repair. Some mixtures of air and HFC-134a (R-134a) have been shown to be combustible at elevated pressures. These mixtures, if ignited, may cause injury or property damage. Additional health and safety information may be obtained from refrigerant manufacturers.**

Refrigerant Connection

INFOID:0000000003846401

A new type refrigerant connection has been introduced to all refrigerant lines except the following location.

- Expansion valve to evaporator
- Refrigerant pressure sensor to liquid tank

O-RING AND REFRIGERANT CONNECTION

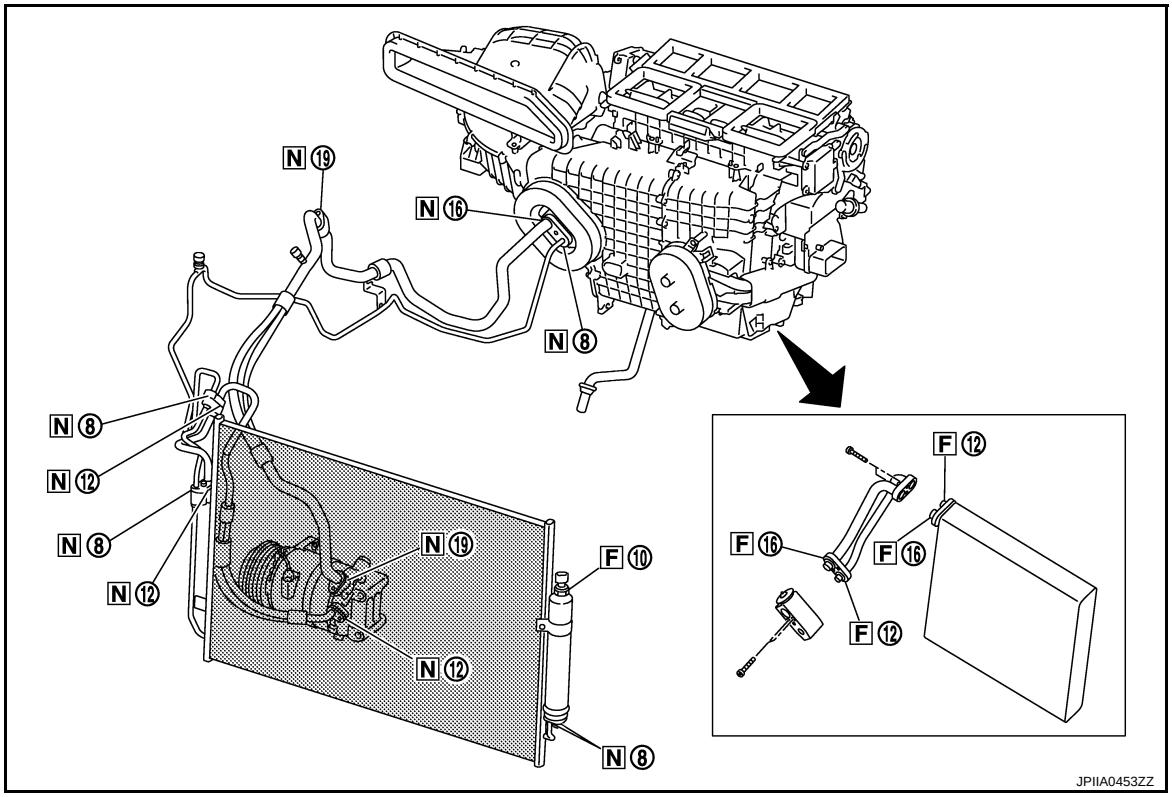

F. Former type refrigerant connection N. New type refrigerant connection

○: O-ring size

CAUTION:

The new and former refrigerant connections use different O-ring configurations. Never confuse O-rings since they are not interchangeable. Refrigerant may leak at the connection if a wrong O-ring is installed.

O-Ring Part Numbers and Specifications

Connection type	Piping connection point		Part number	QTY	O-ring size
New	Low-pressure flexible hose to low-pressure pipe		92474 N8210	1	19
	High-pressure pipe to condenser pipe assembly (Outlet)		92471 N8210	1	8
	Condenser pipe assembly (Inlet) to high-pressure flexible hose (One-touch joint)		92472 N8210	1	12
	Condenser assembly to condenser pipe assembly	Inlet	92472 N8210	1	12
		Outlet	92471 N8210	1	8
	Low-pressure pipe to expansion valve		92473 N8210	1	16
	High-pressure pipe to expansion valve		92471 N8210	1	8
	Compressor to low-pressure flexible hose		92474 N8210	1	19
	Compressor to high-pressure flexible hose		92472 N8210	1	12
	Liquid tank to condenser assembly	Inlet	92471 N8210	1	8
		Outlet		1	
Former	Refrigerant pressure sensor to liquid tank		J2476 89956	1	10
	Expansion valve to evaporator pipe assembly	Inlet	92475 71L00	1	12
		Outlet	92475 72L00	1	16
	Evaporator to evaporator pipe assembly	Inlet	92475 71L00	1	12
		Outlet	92475 72L00	1	16

WARNING:

Check that all refrigerant is discharged into the recycling equipment and the pressure in the system is less than atmospheric pressure. Then gradually loosen the discharge side hose fitting and remove it.

CAUTION:

Observe the following when replacing or cleaning refrigerant cycle components.

- **Store it in the same way at it is when mounted on the car when the compressor is removed. Failure to do so will cause lubricant to enter the low-pressure chamber.**
- **Always use a torque wrench and a back-up wrench when connecting tubes.**
- **Immediately plug all openings to prevent entry of dust and moisture after disconnecting tubes.**
- **Connect the pipes at the final stage of the operation when installing an air conditioner in the vehicle. Never remove the seal caps of pipes and other components until just before required for connection.**
- **Allow components stored in cool areas to warm to working area temperature before removing seal caps. This prevents condensation from forming inside A/C components.**
- **Thoroughly remove moisture from the refrigeration system before charging the refrigerant.**
- **Replace always used O-rings.**
- **Apply lubricant to circle of the O-rings shown in illustration when connecting tube. Be careful not to apply lubricant to threaded portion.**

Name : NISSAN A/C System Oil Type S

- **O-ring must be closely attached to the groove portion of tube.**
- **Be careful not to damage O-ring and tube when replacing the O-ring.**
- **Connect tube until a click can be heard. Then tighten the nut or bolt by hand. Check that the O-ring is installed to tube correctly.**
- **Perform leakage test and make sure that there is no leakage from connections after connecting line. Disconnect the line and replace the O-ring when the refrigerant leaking point is found. Then tighten the connections of seal seat to the specified torque.**

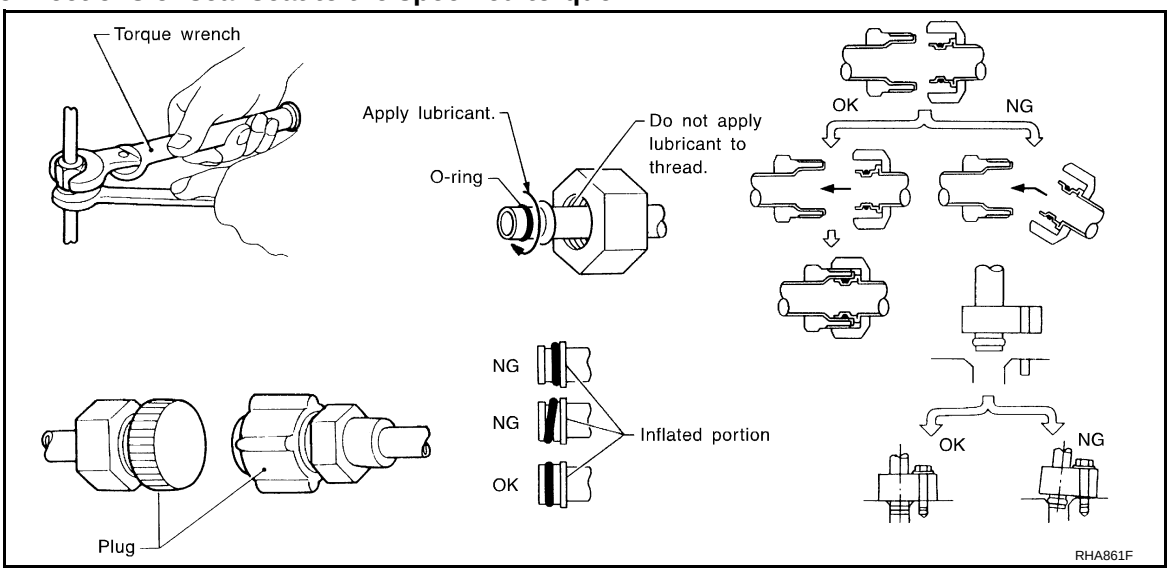

Service Equipment

INFOID:0000000003846402

RECOVERY/RECYCLING EQUIPMENT

Be certain to follow the manufacturer instructions for machine operation and machine maintenance. Never introduce any refrigerant other than that specified into the machine.

ELECTRICAL LEAK DETECTOR

Be certain to follow the manufacturer instructions for tester operation and tester maintenance.

VACUUM PUMP

The lubricant contained inside the vacuum pump is not compatible with the specified lubricant for HFC-134a (R-134a) A/C systems. The vent side of the vacuum pump is exposed to atmospheric pressure. So the vacuum pump lubricant may migrate out of the pump into the service hose. This is possible when the pump is switched OFF after evacuation (vacuuming) and hose is connected to it.
To prevent this migration, use a manual valve placed near the hose-to-pump connection, as per the following.

- Vacuum pumps usually have a manual isolator valve as part of the pump. Close this valve to isolate the service hose from the pump.
- Use a hose equipped with a manual shut-off valve near the pump end for pumps without an isolator. Close the valve to isolate the hose from the pump.
- Disconnect the hose from the pump if the hose has an automatic shut-off valve. As long as the hose is connected, the valve is open and lubricating oil may migrate.

Some one-way valves open when vacuum is applied and close under no vacuum condition. Such valves may restrict the ability of the pump to create a deep vacuum and are not recommended.

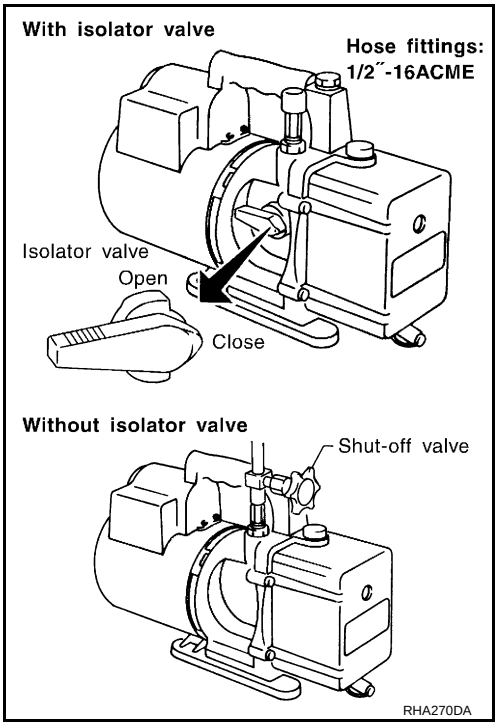

MANIFOLD GAUGE SET

Be certain that the gauge face indicates HFC-134a or R-134a. Be sure the gauge set has 1/2″-16 ACME threaded connections for service hoses. Confirm the set has been used only with refrigerant HFC-134a (R-134a) and specified lubricants.

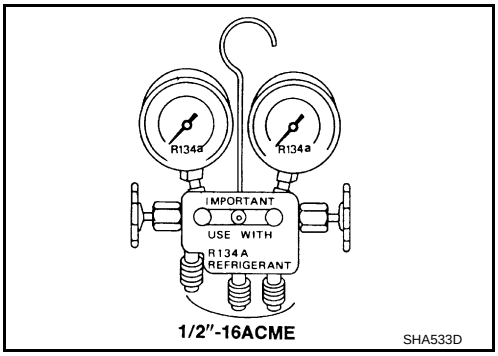

SERVICE HOSES

Be certain that the service hoses display the markings described (colored hose with a black stripe). All hoses must equip positive shut-off devices (either manual or automatic) near the end of the hoses opposite to the manifold gauge.

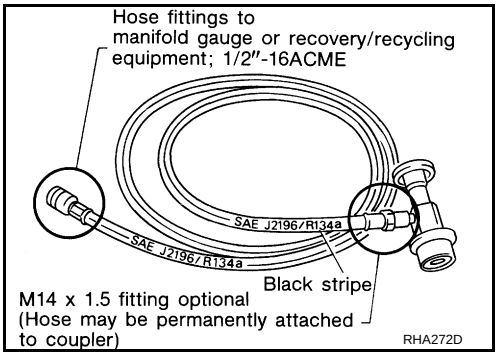

SERVICE COUPLERS

Never attempt to connect HFC-134a (R-134a) service couplers to a CFC-12 (R-12) A/C system. The HFC-134a (R-134a) couplers do not properly connect to the CFC-12 (R-12) system. However, if an improper connection is attempted, discharge and contamination may occur.

Shut-off valve rotation	A/C service valve
Clockwise	Open
Counterclockwise	Close

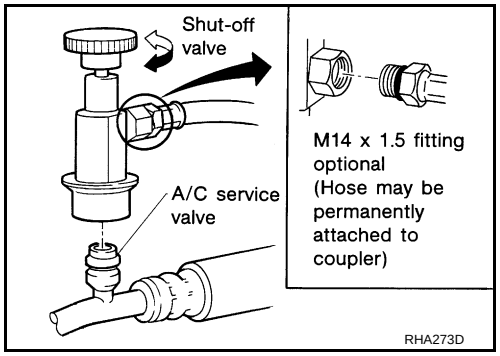

REFRIGERANT WEIGHT SCALE

Verify that no refrigerant other than HFC-134a (R-134a) and specified lubricants have been used with the scale. The hose fitting must be 1/2″-16 ACME if the scale controls refrigerant flow electronically.

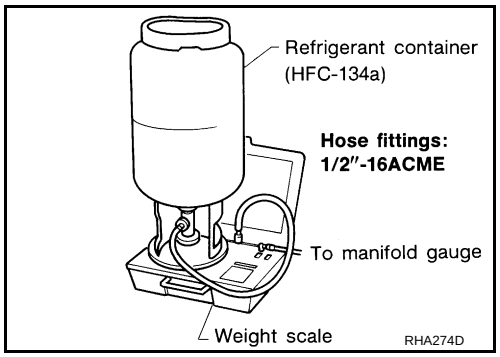

CHARGING CYLINDER

Use of a charging cylinder is not recommended. Refrigerant may be vented into the air from the top valve of the cylinder when filling the cylinder with refrigerant. Also, the accuracy of the cylinder is generally less than that of an electronic scale or of quality recycle/recharge equipment.

COMPRESSOR

General Precautions

INFOID:0000000003846403

CAUTION:

- **Plug all openings to prevent moisture and foreign matter from entering.**
- **Store it in the same way at it is when mounted on the car when the compressor is removed.**
- **Follow “Maintenance of Lubricant Quantity in Compressor” exactly when replacing or repairing the compressor. Refer to HA-28, "Maintenance of Lubricant Quantity".**
- **Keep friction surfaces between clutch and pulley clean. Wipe it off by using a clean waste cloth moistened with thinner if the surface is contaminated with lubricant.**
- **Turn the compressor shaft by hand more than five turns in both directions after compressor service operation. This equally distributes lubricant inside the compressor. Let the engine idle and operate the compressor for one hour after the compressor is installed.**
- **Apply voltage to the new compressor and check for normal operation after replacing the compressor magnet clutch.**

FLUORESCENT LEAK DETECTOR

General Precautions

INFOID:0000000003846404

CAUTION:

- **The A/C system contains a fluorescent leak detection dye used for locating refrigerant leakages. An ultraviolet (UV) lamp is required to illuminate the dye when inspecting for leakages.**
- **Always wear fluorescence enhancing UV safety goggles to protect eyes and enhance the visibility of the fluorescent dye.**
- **The fluorescent dye leak detector is not a replacement for an electrical leak detector (SST: J-41995). The fluorescent dye leak detector should be used in conjunction with an electrical leak detector (SST: J-41995) to pin-point refrigerant leakages.**
- **Read and follow all manufacture operating instructions and precautions prior to performing the work for the purpose of safety and customer satisfaction.**
- **A compressor shaft seal should not necessarily be repaired because of dye seepage. The compressor shaft seal should only be repaired after confirming the leakage with an electrical leak detector (SST: J-41995).**
- **Always remove any remaining dye from the leakage area after repairs are completed to avoid a misdiagnosis during future service.**
- **Never allow dye to come into contact with painted body panels or interior components. Clean immediately with the approved dye cleaner if dye is spilled. Fluorescent dye left on a surface for an extended period of time cannot be removed.**
- **Never spray the fluorescent dye cleaning agent on hot surfaces (engine exhaust manifold, etc.).**
- **Never use more than one refrigerant dye bottle (1/4 ounce /7.4 cc) per A/C system.**
- **Leak detection dyes for HFC-134a (R-134a) and CFC-12 (R-12) A/C systems are different. Never use HFC-134a (R-134a) leak detection dye in CFC-12 (R-12) A/C system, or CFC-12 (R-12) leak detection dye in HFC-134a (R-134a) A/C system, or A/C system damage may result.**
- **The fluorescent properties of the dye remains for three or more years unless a compressor malfunction occurs.**

IDENTIFICATION

NOTE:

Vehicles with factory installed fluorescent dye have a green label.
Vehicles without factory installed fluorescent dye have a blue label.

IDENTIFICATION LABEL FOR VEHICLE

Vehicles with factory installed fluorescent dye have an identification label on the front side of hood.

BASIC INSPECTION

DIAGNOSIS AND REPAIR WORKFLOW

Work Flow

INFOID:0000000003884685

OVERALL SEQUENCE

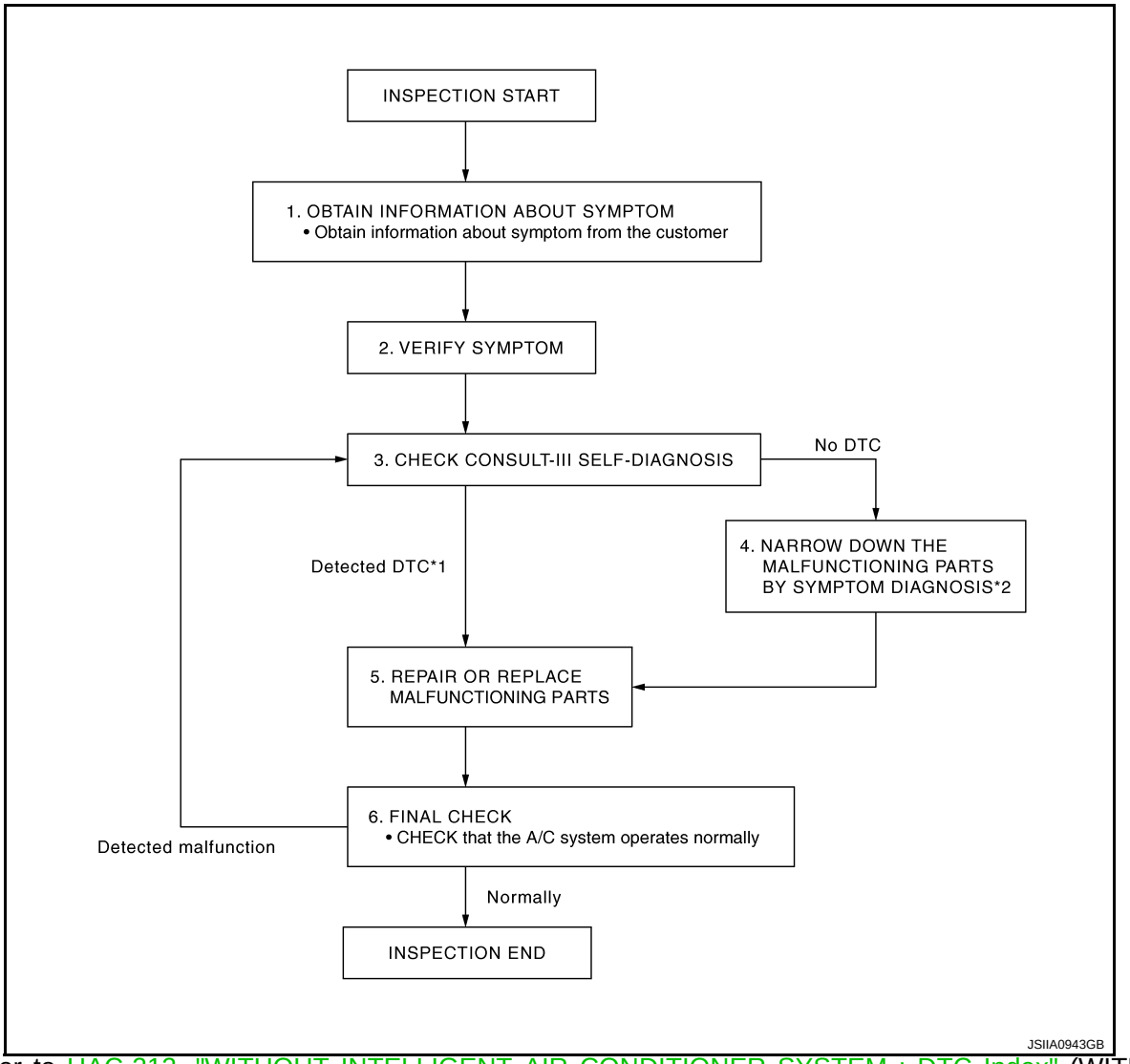

*1: Refer to HAC-212, "WITHOUT INTELLIGENT AIR CONDITIONER SYSTEM : DTC Index" (WITHOUT INTELLIGENT AIR CONDITIONER SYSTEM) or HAC-224, "WITH INTELLIGENT AIR CONDITIONER SYSTEM : DTC Index" (WITH INTELLIGENT AIR CONDITIONER SYSTEM).
*2: Refer to HAC-226, "Diagnosis Chart By Symptom".

DETAILED FLOW

1. OBTAIN INFORMATION ABOUT SYMPTOM

Interview the customer to obtain as much information as possible about the conditions and environment under which the malfunction occurred.

>> GO TO 2.

2. VERIFY SYMPTOM

Verify the symptom with operational check based on the information obtained from the customer. Refer to HAC-108, "WITHOUT INTELLIGENT AIR CONDITIONER SYSTEM : Description & Inspection".

>> GO TO 3.

3. CHECK WITH SELF-DIAGNOSIS FUNCTION OF CONSULT-III

Using CONSULT-III, perform “SELF-DIAGNOSIS RESULTS” of HVAC. Refer to HAC-212, "WITHOUT INTELLIGENT AIR CONDITIONER SYSTEM : DTC Index" (WITHOUT INTELLIGENT AIR CONDITIONER SYSTEM) or HAC-224, "WITH INTELLIGENT AIR CONDITIONER SYSTEM : DTC Index" (WITH INTELLIGENT AIR CONDITIONER SYSTEM).

Are self-diagnosis results normal?

YES >> GO TO 4.
NO >> GO TO 5.

4. NARROW DOWN THE MALFUNCTIONING PARTS BY SYMPTOM DIAGNOSIS

Perform symptom diagnosis and narrow down the malfunctioning parts. Refer to HAC-226, "Diagnosis Chart By Symptom".

>> GO TO 5.

5. REPAIR OR REPLACE MALFUNCTIONING PARTS

Repair or replace malfunctioning parts.

NOTE:
If DTC is displayed, erase DTC after repairing or replacing malfunctioning parts.

>> GO TO 6.

6. FINAL CHECK

Check that the A/C system operates normally.

Is the inspection result normal?

YES >> INSPECTION END
NO >> GO TO 3.

INSPECTION AND ADJUSTMENT
WITHOUT INTELLIGENT AIR CONDITIONER SYSTEM
WITHOUT INTELLIGENT AIR CONDITIONER SYSTEM : Description & Inspection

INFOID:0000000003884686

DESCRIPTION

The purpose of the operational check is to check that the individual system operates normally.

Conditions : Engine running at normal operating temperature

INSPECTION PROCEDURE

1. CHECK MEMORY FUNCTION

1. Start the engine.
2. Operate the temperature control dial (driver side) and raise the temperature setting to 32°C (90°F).
3. Press the OFF switch.
4. Turn the ignition switch OFF.
5. Turn the ignition switch ON.
6. Press the AUTO switch.
7. Check that the temperature setting before turning the ignition switch OFF is stored.

Is the inspection result normal?

YES >> GO TO 2.
NO >> Memory function malfunction: HAC-236, "Inspection procedure".

2. CHECK BLOWER MOTOR SPEED

1. Start the engine.
2. Operate the fan control dial. Check that the fan speed changes. Check the operation for all fan speeds.
3. Set the fan speed to speed 7.

Is the inspection result normal?

YES >> GO TO 3.
NO >> Blower motor system malfunction: HAC-193, "Diagnosis Procedure".

3. CHECK DISCHARGE AIR

1. Press the MODE switch and the DEF switch.
2. Each position indicator should change shape.
3. Confirm that discharge air comes out according to the air distribution table. Refer to HAC-122, "WITHOUT INTELLIGENT AIR CONDITIONER SYSTEM : System Description".

Discharge air flow						
Mode position indication	Condition	Air outlet/distribution				
		VENT		FOOT		DEF
		Front	Rear	Front	Rear	
	DUAL switch: OFF Rear ventilator : OPEN	89%	11%	—	—	—
		46%	17%	27%	10%	—
		14%	16%	34%	14%	22%
		12%	16%	27%	13%	32%
		11%	12%	—	—	77%

JPIIA0877GB

NOTE:
Confirm that the compressor clutch is engaged (sound or visual inspection) and the intake door position is at the FRE when DEF is selected.

Is the inspection result normal?

YES >> GO TO 4.

NO >> Mode door system malfunction: HAC-186, "Diagnosis Procedure".

4. CHECK INTAKE AIR

1. Press the REC switch. REC indicator is turned ON.
2. Press the FRE switch. FRE indicator is turned ON.
3. Listen for the intake door position change. (Slight change of blower sound can be heard.)

NOTE:
Confirm that the compressor clutch is engaged (sound or visual inspection) and the intake door position is at the FRE when the DEF is selected.

Is the inspection result normal?

YES >> GO TO 5.
NO >> Intake door system malfunction: HAC-189, "Diagnosis Procedure".

5. CHECK A/C SWITCH

1. Press the A/C switch.
2. The A/C switch indicator is turned ON.
   Confirm that the compressor clutch engages (sound or visual inspection).

Is the inspection result normal?

YES >> GO TO 6.
NO >> Magnet clutch system malfunction: HAC-197, "Diagnosis Procedure".

6. CHECK WITH TEMPERATURE SETTING LOWERED

1. Operate the compressor.
2. Operate the temperature control dial (driver side) and lower the temperature setting to 18°C (60°F).
3. Check that the cool air blows from the outlets.

Is the inspection result normal?

YES >> GO TO 7.
NO >> Insufficient cooling: HAC-228, "Inspection procedure".

7. CHECK WITH TEMPERATURE SETTING RAISED

1. Operate the temperature control dial (driver side) and raise the temperature setting to 32°C (90°F) after warming up the engine.
2. Check that the warm air blows from the outlets.

Is the inspection result normal?

YES >> GO TO 8.
NO >> Insufficient heating: HAC-231, "Inspection procedure".

8. CHECK LEFT AND RIGHT VENTILATION TEMPERATURE SEPARATELY CONTROL SYSTEM FUNCTION

1. Press the DUAL switch, and then check that “DUAL” is shown on the display.
2. Operate the temperature control dial (driver side). Check that the discharge air temperature (driver side) changes.
3. Operate the temperature control dial (passenger side). Check that the discharge air temperature (passenger side) changes.
4. Press the DUAL switch, and then check that the temperature setting (LH/RH) is unified to the driver side temperature setting.

Is the inspection result normal?

YES >> GO TO 9.
NO >> Refer to HAC-226, "Diagnosis Chart By Symptom" and perform the appropriate diagnosis.

9. CHECK AUTO MODE

1. Press the AUTO switch, and then check that “AUTO” is shown on the display.
2. Operate the temperature control dial (driver side). Check that the fan speed or outlet changes (the discharge air temperature or fan speed varies depending on the ambient temperature, in-vehicle temperature, and temperature setting).

Is the inspection result normal?

YES >> GO TO 10.
NO >> Refer to HAC-226, "Diagnosis Chart By Symptom" and perform the appropriate diagnosis.

10. CHECK AUTO MODE

1. Press the AUTO switch, and then check that “AUTO” is shown on the display.
2. Operate the temperature control dial (driver side). Check that the fan speed or outlet changes (the discharge air temperature or fan speed varies depending on the ambient temperature, in-vehicle temperature, and temperature setting).

Is the inspection result normal?

YES >> INSPECTION END
NO >> Refer to HAC-226, "Diagnosis Chart By Symptom" and perform the appropriate diagnosis.

WITHOUT INTELLIGENT AIR CONDITIONER SYSTEM : Temperature Setting Trimmer

INFOID:0000000003884687

DESCRIPTION

If the temperature felt by the customer is different than the air flow temperature controlled by the temperature setting, the A/C auto amp. control temperature can be adjusted to compensate for the temperature setting.

HOW TO SET

Using CONSULT-III, perform “TEMP SET CORRECT” on “WORK SUPPORT” of HVAC.

Work support items	Display (°F)	Display (°C)
TEMP SET CORRECT	6	3.0
	5	2.5
	4	2.0
	3	1.5
	2	1.0
	1	0.5
	0 (initial status)	0 (initial status)
	–1	–0.5
	–2	–1.0
	–3	–1.5
	–4	–2.0
	–5	–2.5
	–6	–3.0

NOTE:

- When the temperature setting is set to 25.0°C (77°F) and –3.0°C (–6°F), the temperature controlled by A/C auto amp. is 25.0°C (77°F) –3.0°C (6°F) = 22.0°C (71°F) and the temperature becomes lower than the temperature setting.
- When the battery cable is disconnected from the negative terminal or when the battery voltage becomes 10 V or less, trimmer operation is canceled. Temperature set becomes that of initial condition.

WITHOUT INTELLIGENT AIR CONDITIONER SYSTEM : Foot Position Setting Trimmer

INFOID:0000000003884688

DESCRIPTION

In the FOOT mode, the air blowing to the DEF can be turned ON/OFF.

HOW TO SET

Using CONSULT-III, perform “BLOW SET” on “WORK SUPPORT” of HVAC.

Work support items	Display	DEF door position	
		Auto control	Manual control
BLOW SET	Mode 1	OPEN	CLOSE
	Mode 2 (initial status)	OPEN	OPEN
	Mode 3	CLOSE	OPEN
	Mode 4	CLOSE	CLOSE

NOTE:
When the battery cable is disconnected from the negative terminal or when the battery voltage becomes 10 V or less, trimmer operation is cancelled. Wind distribution rate set becomes that of initial condition.

WITHOUT INTELLIGENT AIR CONDITIONER SYSTEM : Inlet Port Memory Function (FRE)

INFOID:0000000003884689

DESCRIPTION

- If the ignition switch is turned to the OFF position while the FRE switch is set to ON (fresh air intake), “Perform the memory” or “Do not perform the memory” of the FRE switch ON (fresh air intake) condition can be selected.
- If “Perform the memory” was set, the FRE switch will be ON (fresh air intake) when turning the ignition switch to the ON position again.
- If “Do not perform the memory” was set, the air inlets will be controlled automatically when turning the ignition switch to the ON position again.

HOW TO SET

Using CONSULT-III, perform “FRE MEMORY SET” on “WORK SUPPORT” of HVAC.

Work support items	Display	Setting
FRE MEMORY SET	WITHOUT (initial status)	Perform the memory of manual FRE
	WITH	Do not perform the memory of manual FRE (auto control)

NOTE:
When the battery cable is disconnected from the negative terminal or when the battery voltage becomes 10 V or less, the setting of the FRE switch memory function may be cancelled.

WITHOUT INTELLIGENT AIR CONDITIONER SYSTEM : Inlet Port Memory Function (REC)

INFOID:0000000003884690

DESCRIPTION

- If the ignition switch is turned to the OFF position while the REC switch is set to ON (recirculation), “Perform the memory” or “Do not perform the memory” of the REC switch ON (recirculation) condition can be selected.
- If “Perform the memory” was set, the REC switch will be ON (recirculation) when turning the ignition switch to the ON position again.
- If “Do not perform the memory” was set, the air inlets will be controlled automatically when turning the ignition switch to the ON position again.

HOW TO SET

Using CONSULT-III, perform “REC MEMORY SET” on “WORK SUPPORT” of HVAC.

Work support items	Display	Setting
REC MEMORY SET	WITHOUT	Perform the memory of manual REC
	WITH (initial status)	Do not perform the memory of manual REC (auto control)

NOTE:
When the battery cable is disconnected from the negative terminal or when the battery voltage becomes 10 V or less, the setting of the REC switch memory function may be cancelled.

WITH INTELLIGENT AIR CONDITIONER SYSTEM

WITH INTELLIGENT AIR CONDITIONER SYSTEM : Description & Inspection

INFOID:0000000003888717

DESCRIPTION

The purpose of the operational check is to check that the individual system operates normally.

Conditions : Engine running at normal operating temperature

INSPECTION PROCEDURE

1. CHECK MEMORY FUNCTION

1. Start the engine.
2. Operate the temperature control dial (driver side) and raise the temperature setting to 32°C (90°F).
3. Press the OFF switch.
4. Turn the ignition switch OFF.
5. Turn the ignition switch ON.
6. Press the AUTO switch.
7. Check that the temperature setting before turning the ignition switch OFF is stored.

Is the inspection result normal?

YES >> GO TO 2.
NO >> Memory function malfunction: HAC-236, "Inspection procedure".

2. CHECK BLOWER MOTOR SPEED

1. Start the engine.
2. Operate the fan control dial. Check that the fan speed changes. Check the operation for all fan speeds.
3. Set the fan speed to speed 7.

Is the inspection result normal?

YES >> GO TO 3.
NO >> Blower motor system malfunction: HAC-193, "Diagnosis Procedure".

3. CHECK DISCHARGE AIR

1. Press the MODE switch and the DEF switch.
2. Each position indicator should change shape.
3. Confirm that discharge air comes out according to the air distribution table. Refer to HAC-133, "WITH INTELLIGENT AIR CONDITIONER SYSTEM : System Description".

Discharge air flow						
Mode position indication	Condition	Air outlet/distribution				
		VENT		FOOT		DEF
		Front	Rear	Front	Rear	
	DUAL switch: OFF Rear ventilator : OPEN	89%	11%	—	—	—
		46%	17%	27%	10%	—
		14%	16%	34%	14%	22%
		12%	16%	27%	13%	32%
		11%	12%	—	—	77%

JPIIA0877GB

NOTE:
Confirm that the compressor clutch is engaged (sound or visual inspection) and the intake door position is at the FRE when DEF is selected.

Is the inspection result normal?

YES >> GO TO 4.
NO >> Mode door system malfunction: HAC-186, "Diagnosis Procedure".

4. CHECK INTAKE AIR

1. Press the intake switch. Indicator is turned ON (REC).
2. Press the intake switch again. Indicator is turned OFF (FRE).
3. Listen for the intake door position change. (Slight change of blower sound can be heard.)

NOTE:
Confirm that the compressor clutch is engaged (sound or visual inspection) and the intake door position is at the FRE when the DEF is selected.

Is the inspection result normal?

YES >> GO TO 5.
NO >> Intake door system malfunction: HAC-189, "Diagnosis Procedure".

5. CHECK A/C SWITCH

1. Press the A/C switch.
2. The A/C switch indicator is turned ON.
   Confirm that the compressor clutch engages (sound or visual inspection).

Is the inspection result normal?

YES >> GO TO 6.
NO >> Magnet clutch system malfunction: HAC-197, "Diagnosis Procedure".

6. CHECK WITH TEMPERATURE SETTING LOWERED

1. Operate the compressor.
2. Operate the temperature control dial (driver side) and lower the temperature setting to 18°C (60°F).
3. Check that the cool air blows from the outlets.

Is the inspection result normal?

YES >> GO TO 7.
NO >> Insufficient cooling: HAC-228, "Inspection procedure".

7. CHECK WITH TEMPERATURE SETTING RAISED

1. Operate the temperature control dial (driver side) and raise the temperature setting to 32°C (90°F) after warming up the engine.
2. Check that the warm air blows from the outlets.

Is the inspection result normal?

YES >> GO TO 8.
NO >> Insufficient heating: HAC-231, "Inspection procedure".

8. CHECK LEFT AND RIGHT VENTILATION TEMPERATURE SEPARATELY CONTROL SYSTEM FUNCTION

1. Press the DUAL switch, and then check that “DUAL” is shown on the display.
2. Operate the temperature control dial (driver side). Check that the discharge air temperature (driver side) changes.
3. Operate the temperature control dial (passenger side). Check that the discharge air temperature (passenger side) changes.
4. Press the DUAL switch, and then check that the temperature setting (LH/RH) is unified to the driver side temperature setting.

Is the inspection result normal?

YES >> GO TO 9.
NO >> Refer to HAC-226, "Diagnosis Chart By Symptom" and perform the appropriate diagnosis.

9. CHECK AUTO MODE

1. Press the AUTO switch, and then check that “AUTO” is shown on the display.
2. Operate the temperature control dial (driver side). Check that the fan speed or outlet changes (the discharge air temperature or fan speed varies depending on the ambient temperature, in-vehicle temperature, and temperature setting).

Is the inspection result normal?

YES >> GO TO 10.
NO >> Refer to HAC-226, "Diagnosis Chart By Symptom" and perform the appropriate diagnosis.

10. CHECK PLASMACLUSTER ION CONTROL FUNCTION

1. Turn ignition switch OFF and restart the engine.

2. Ion indicator is shown on the display.
3. Press OFF switch.
4. Ion indicator is turned OFF.

Is the inspection result normal?

YES >> GO TO 11.
NO >> Refer to HAC-227, "WITH INTELLIGENT AIR CONDITIONER SYSTEM : Inspection procedure".

11. CHECK ION CONTROL MODE

1. Turn ignition switch OFF and restart the engine.
2. Turn fan control dial clockwise.
3. Ion indicator (blue) is turned ON.
4. Ion indicator (blue) changes to ion indicator (green) after approximately 15 minutes.
5. Ion indicator (green) changes to ion indicator (blue) after approximately 15 minutes.
6. Press CLEAN switch.
7. Ion indicator (blue) changes to ion indicator (green) after approximately 30 minutes.
8. Ion indicator (green) changes to ion indicator (blue) after approximately 15 minutes.

Is the inspection result normal?

YES >> INSPECTION END
NO >> Replace unified meter and A/C amp.

WITH INTELLIGENT AIR CONDITIONER SYSTEM : Temperature Setting Trimmer

INFOID:0000000003888718

DESCRIPTION

If the temperature felt by the customer is different than the air flow temperature controlled by the temperature setting, the A/C auto amp. control temperature can be adjusted to compensate for the temperature setting.

HOW TO SET

Using CONSULT-III, perform “TEMP SET CORRECT” on “WORK SUPPORT” of HVAC.

Work support items	Display (°F)	Display (°C)
TEMP SET CORRECT	6	3.0
	5	2.5
	4	2.0
	3	1.5
	2	1.0
	1	0.5
	0 (initial status)	0 (initial status)
	–1	–0.5
	–2	–1.0
	–3	–1.5
	–4	–2.0
	–5	–2.5
	–6	–3.0

NOTE:

- When the temperature setting is set to 25.0°C (77°F) and –3.0°C (–6°F), the temperature controlled by A/C auto amp. is 25.0°C (77°F) –3.0°C (6°F) = 22.0°C (71°F) and the temperature becomes lower than the temperature setting.
- When the battery cable is disconnected from the negative terminal or when the battery voltage becomes 10 V or less, trimmer operation is canceled. Temperature set becomes that of initial condition.

WITH INTELLIGENT AIR CONDITIONER SYSTEM : Foot Position Setting Trimmer

INFOID:0000000003888719

DESCRIPTION

In the FOOT mode, the air blowing to the DEF can be turned ON/OFF.

HOW TO SET

Using CONSULT-III, perform “BLOW SET” on “WORK SUPPORT” of HVAC.

Work support items	Display	DEF door position	
		Auto control	Manual control
BLOW SET	Mode 1	OPEN	CLOSE
	Mode 2 (initial status)	OPEN	OPEN
	Mode 3	CLOSE	OPEN
	Mode 4	CLOSE	CLOSE

NOTE:
When the battery cable is disconnected from the negative terminal or when the battery voltage becomes 10 V or less, trimmer operation is cancelled. Wind distribution rate set becomes that of initial condition.

WITH INTELLIGENT AIR CONDITIONER SYSTEM : Inlet Port Memory Function (FRE)

INFOID:0000000003888720

DESCRIPTION

- If the ignition switch is turned to the OFF position while the intake switch is set to OFF (fresh air intake), “Perform the memory” or “Do not perform the memory” of the intake switch OFF (fresh air intake) condition can be selected.
- If “Perform the memory” was set, the intake switch will be OFF (fresh air intake) when turning the ignition switch to the ON position again.
- If “Do not perform the memory” was set, the air inlets will be controlled automatically when turning the ignition switch to the ON position again.

HOW TO SET

Using CONSULT-III, perform “FRE MEMORY SET” on “WORK SUPPORT” of HVAC.

Work support items	Display	Setting
FRE MEMORY SET	WITHOUT (initial status)	Perform the memory of manual FRE
	WITH	Do not perform the memory of manual FRE (auto control)

NOTE:
When the battery cable is disconnected from the negative terminal or when the battery voltage becomes 10 V or less, the setting of the intake switch memory function may be cancelled.

WITH INTELLIGENT AIR CONDITIONER SYSTEM : Inlet Port Memory Function (REC)

INFOID:0000000003888721

DESCRIPTION

- If the ignition switch is turned to the OFF position while the intake switch is set to ON (recirculation), “Perform the memory” or “Do not perform the memory” of the intake switch ON (recirculation) condition can be selected.
- If “Perform the memory” was set, the intake switch will be ON (recirculation) when turning the ignition switch to the ON position again.
- If “Do not perform the memory” was set, the air inlets will be controlled automatically when turning the ignition switch to the ON position again.

HOW TO SET

Using CONSULT-III, perform “REC MEMORY SET” on “WORK SUPPORT” of HVAC.

Work support items	Display	Setting
REC MEMORY SET	WITHOUT	Perform the memory of manual REC
	WITH (initial status)	Do not perform the memory of manual REC (auto control)

NOTE:

When the battery cable is disconnected from the negative terminal or when the battery voltage becomes 10 V or less, the setting of the intake switch memory function may be cancelled.

WITH INTELLIGENT AIR CONDITIONER SYSTEM : Gas Sensor Sensitivity Adjustment Function (With Intelligent Air Conditioner System)

INFOID:0000000003884691

DESCRIPTION

According to customer's sense of smell, gas sensor sensitivity can be changed.

HOW TO SET

Using CONSULT-III, perform "GAS SENSOR ADJUSTMENT" on "WORK SUPPORT" of HVAC.

Work support items	Display	Setting
GAS SENSOR ADJUSTMENT	2	Less sensitive setting than display 1 (REC later than display 1.)
	1	Less sensitive setting than normal setting (REC later than normal operation.)
	0 (initial status)	Normal
	–1	More sensitive setting than normal setting (REC earlier than normal operation.)
	–2	More sensitive setting than display –1 (REC earlier than display –1.)

NOTE:

When the battery cable is disconnected from the negative terminal or when the battery voltage becomes 10 V or less, the setting of the intake switch memory function may be cancelled.

WITH INTELLIGENT AIR CONDITIONER SYSTEM : Clean Switch Interlocking Movement Change Function (With Intelligent Air Conditioner System)

INFOID:0000000003884692

DESCRIPTION

Condition for interlocking movement of clean switch and A/C switch can be changed. In addition operation of the clean switch, which activates the automatic re-circulation control system, can be set to become available when the A/C switch is ON.

HOW TO SET

Using CONSULT-III, perform "CLEAN SW SET" on "WORK SUPPORT" of HVAC.

Work support items	Display	setting
CLEAN SW SET	MODE 1	Initial setting
	MODE 2	Setting 1
	MODE 3	Setting 2
	MODE 4	Setting 3

Initial setting	When the clean switch is ON, the A/C switch is also turned ON in synchronization with the clean switch. Control of the clean switch is functional even when the A/C switch is turned OFF.
Setting 1	When the clean switch is ON, the A/C switch is not turned ON in synchronization with the clean switch. Control of the clean switch is functional even when the A/C switch is turned OFF.
Setting 2	When the clean switch is ON, the A/C switch is also turned ON in synchronization with the clean switch. When the A/C switch is turned OFF, the clean switch is turned OFF in synchronization with the A/C switch.
Setting 3	Clean switch can be turned ON only when A/C switch is ON. When the A/C switch is turned OFF, the clean switch is turned OFF in synchronization with the A/C switch.

NOTE:

When the battery cable is disconnected from the negative terminal or when the battery voltage becomes 10 V or less, the setting of the intake switch memory function may be cancelled.

FUNCTION DIAGNOSIS

COMPRESSOR CONTROL FUNCTION

Description

INFOID:0000000003943704

PRINCIPLE OF OPERATION

Compressor is not activated.

Functional circuit diagram

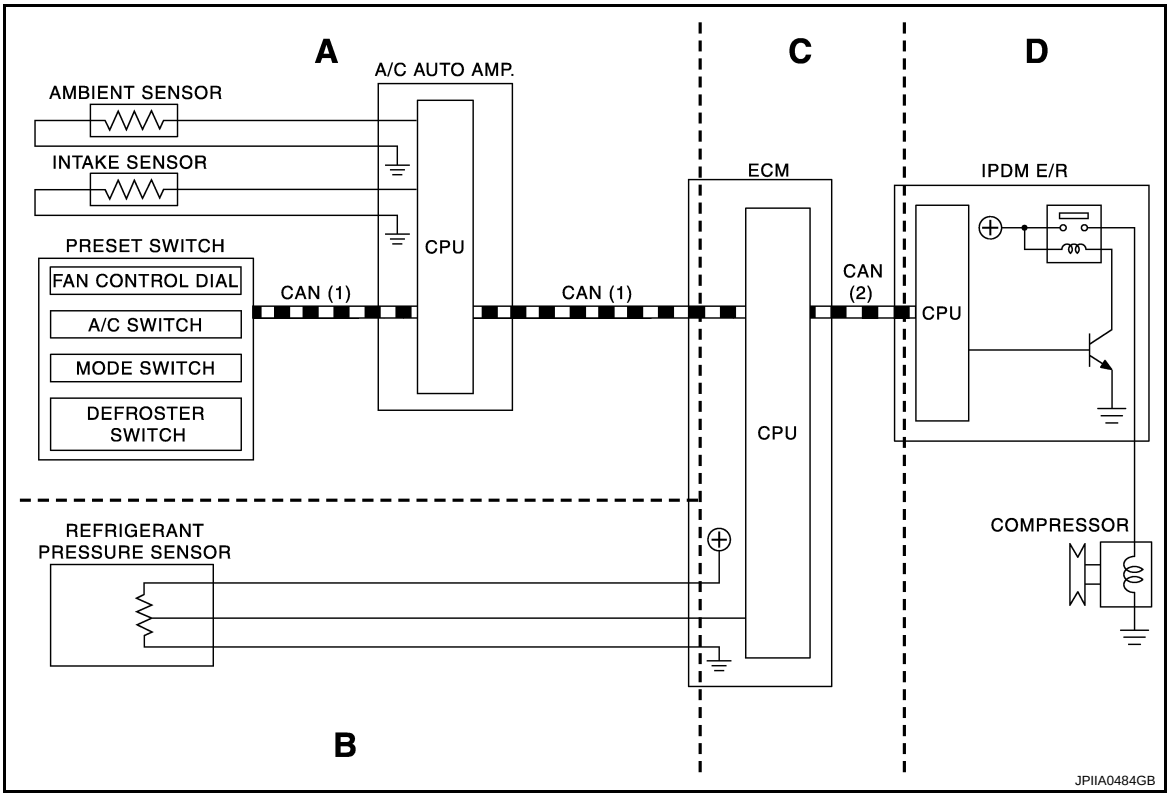

CAN (1) : A/C switch signal
: Blower fan motor switch signal

CAN (2) : A/C Compressor request signal

Functional initial inspection chart

Control unit	Diagnosis Item		Location			
			A	B	C	D
A/C auto amp.	"HVAC"	Self-diagnosis	Yes			
		Data monitor	Yes			
		Active test	Yes			Yes
ECM	"ENGINE"	Self-diagnosis (CAN system diagnosis)			Yes	
		Data monitor		Yes	Yes	
IPDM E/R	"IPDM E/R"	Self-diagnosis (CAN system diagnosis)				Yes
		Data monitor			Yes	
	Auto active test					Yes

Fail-Safe

INFOID:0000000003926398

FAIL-SAFE FUNCTION

If a communication error exists between the A/C auto amp., and the AV control unit and preset switch for 30 seconds or longer, air conditioner is controlled under the following conditions:

Compressor	**: ON**
Air outlet	**: AUTO**
Air inlet	**: FRE (Fresh)**
Blower fan speed	**: AUTO**
Set temperature	**: Setting before communication error occurs**

Component Part Location

INFOID:0000000003884694

ENGINE COMPARTMENT

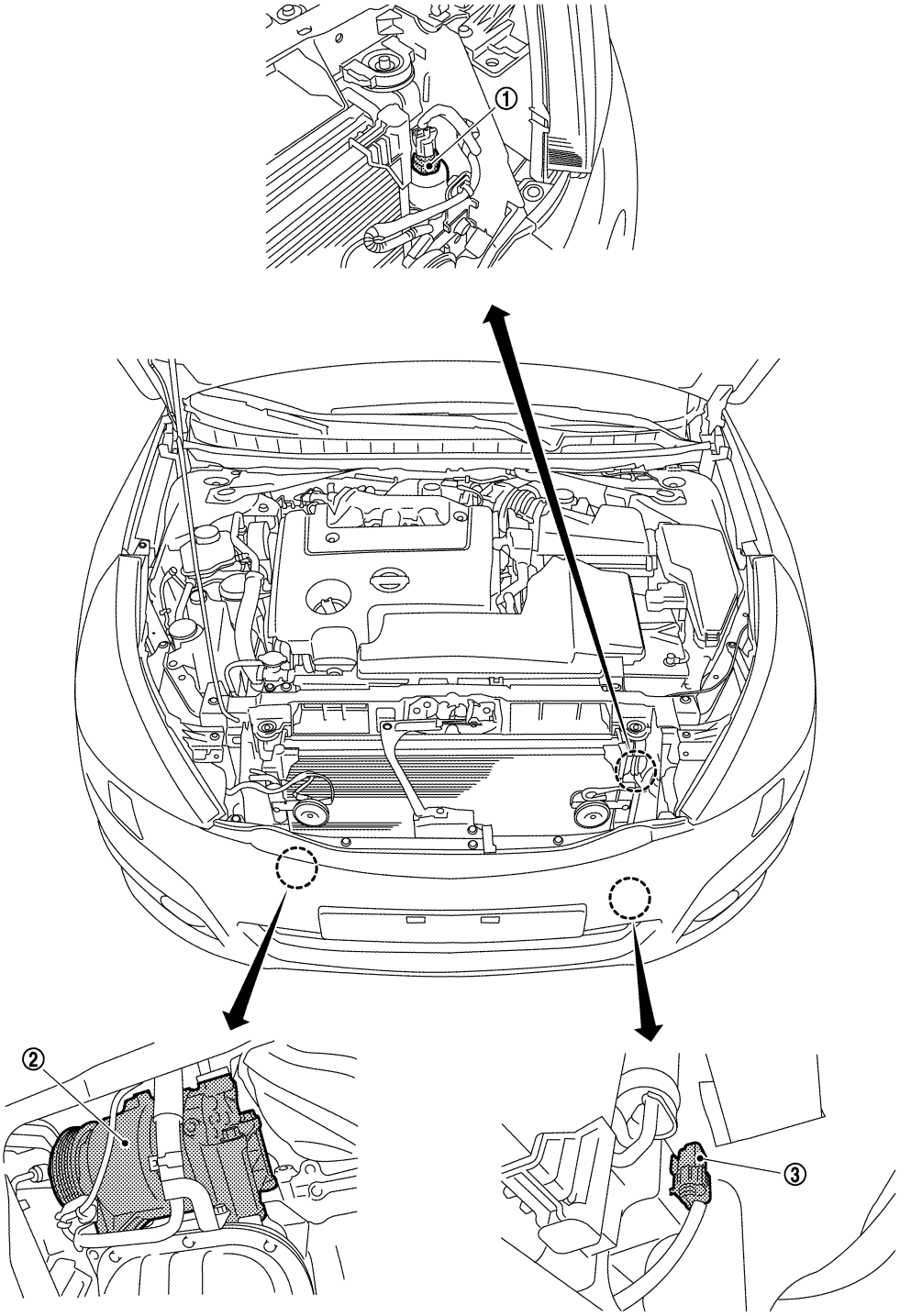

JPIIA0992ZZ

1. Refrigerant pressure sensor
2. Compressor (magnet clutch)
3. Ambient sensor

PASSENGER COMPARTMENT

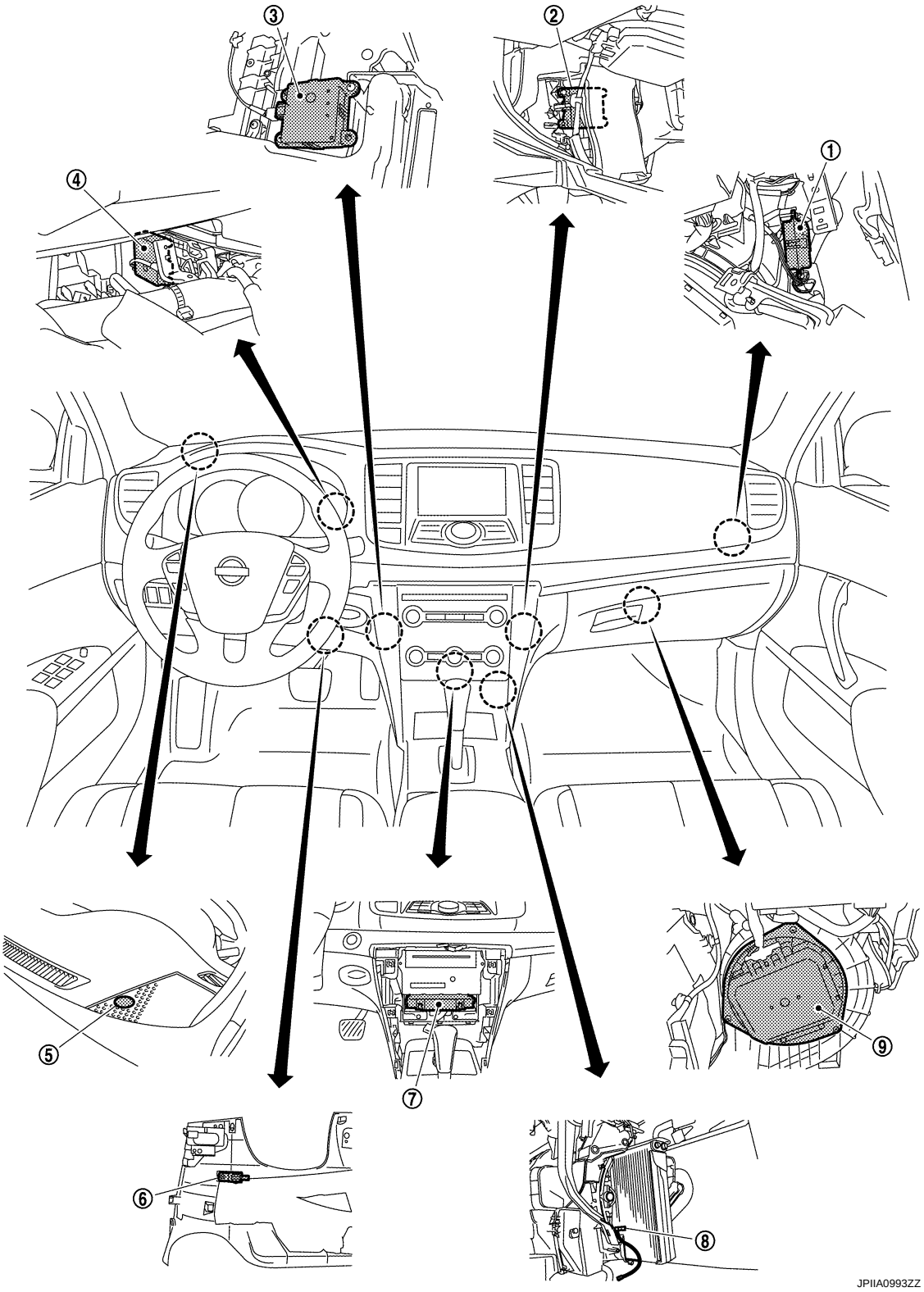

1. Intake door motor
2. Air mix door motor (passenger side)
3. Air mix door motor (driver side)
4. Mode door motor
5. Sunload sensor
6. In-vehicle sensor
7. A/C auto amp.
8. Intake sensor
9. Blower motor

Component's Role

INFOID:0000000003884695

Component	Description
Refrigerant pressure sensor	EC-348, "Description"
Compressor	HAC-197, "Description"
Ambient sensor	HAC-166, "Description"
Intake door motor	HAC-188, "Description"
Air mix door motor (driver side)	HAC-181, "Description"
Air mix door motor (passenger side)	HAC-183, "Description"
Mode door motor	HAC-185, "Description"
Sunload sensor	HAC-178, "Description"
In-vehicle sensor	HAC-169, "Description"
A/C auto amp.	HAC-192, "Description"
Intake sensor	HAC-172, "Description"
Blower motor	HAC-193, "Description"

AUTOMATIC AIR CONDITIONER SYSTEM
WITHOUT INTELLIGENT AIR CONDITIONER SYSTEM

WITHOUT INTELLIGENT AIR CONDITIONER SYSTEM : System Diagram

INFOID:0000000003884702

CONTROL SYSTEM

The control system consists of input sensors, switches, the A/C auto amp. (microcomputer) and outputs. The relationship of these components is as shown in the figure below:

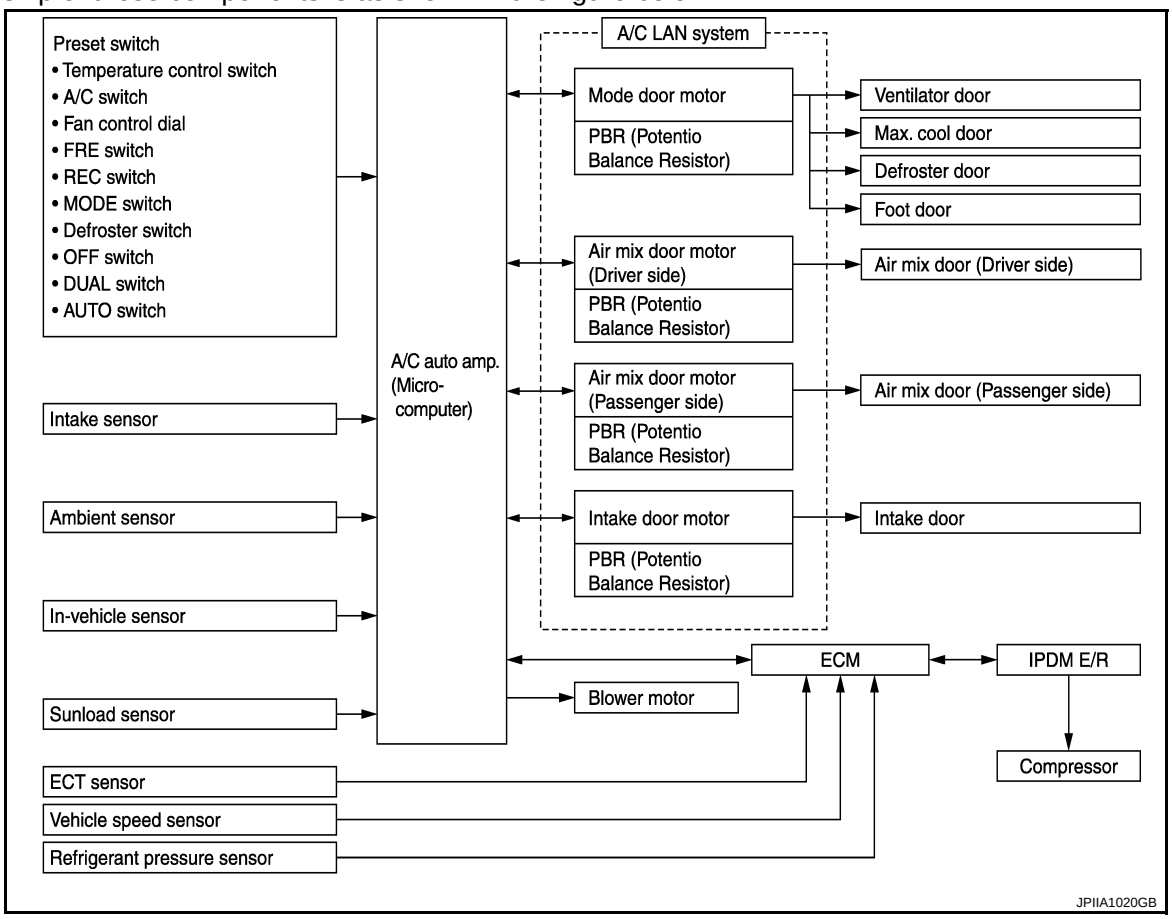

WITHOUT INTELLIGENT AIR CONDITIONER SYSTEM : System Description

INFOID:0000000003884704

CONTROL OPERATION

Display

The operation status of the system is displayed on the screen.

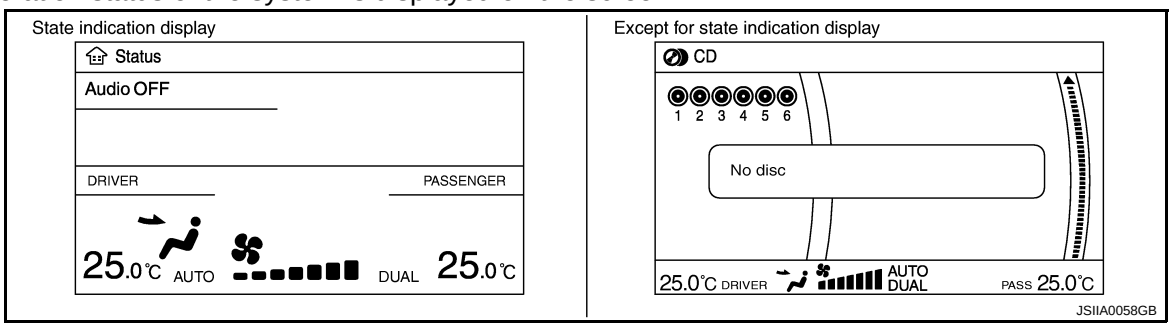

A/C Control

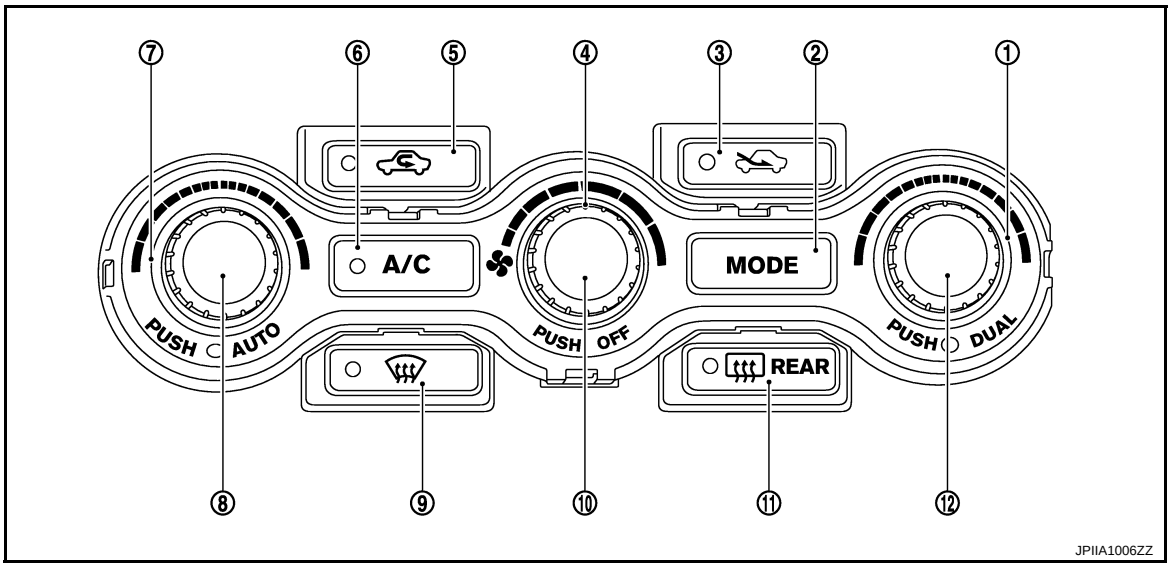

1.	Temperature control dial (passenger side)	2.	MODE switch	3.	Fresh (FRE) switch
4.	Fan control dial	5.	Recirculation (REC) switch	6.	A/C switch
7.	Temperature control dial (driver side)	8.	AUTO switch	9.	Defroster (DEF) switch
10.	OFF switch	11.	Rear window defogger switch	12.	DUAL switch

MODE Switch

The air discharge outlets are controlled with this switch.

Temperature Control Dial (Driver Side)

The set temperature is increased or decreased with this dial.

Temperature Control Dial (Passenger Side)

- The set temperature is increased or decreased with this dial.
- When the temperature control dial is turned, DUAL switch indicator is turned ON.

AUTO Switch

- The compressor, intake door, air mix doors, mode doors and blower speed are automatically controlled so that the in-vehicle temperature will reach, and be maintained at the set temperature selected by the operator.
- When pressing the AUTO switch, air inlet, air outlet, fan speed, and discharge air temperature are automatically controlled.

Defroster (DEF) Switch

Mode doors are set to the defrost position with this switch. Also, intake door is set to the outside air position, and compressor turns ON.

A/C Switch

Compressor turns ON or OFF with this switch.
(Pressing the A/C switch when the A/C switch is ON turns OFF the A/C switch and compressor.)

Fan Control Dial

The blower speed is manually controlled with this dial. Seven speeds are available for manual control (as shown on the display screen).

OFF Switch

Compressor and blower turn OFF, air inlet sets to FRE, and mode the position is set to foot position.

Rear Window Defogger Switch

When indicator is ON, rear window is defogged.

Recirculation (REC) Switch

- When REC switch is ON, REC switch indicator turns ON, and air inlet is fixed to REC.
- When REC switch is pressed for approximately 1.5 seconds or longer, REC and FRE switch indicators blink twice. Then, automatic control mode is entered. Inlet status is displayed even during automatic control.

- When FRE switch is turned ON, REC switch is automatically turned OFF (fixed to FRE mode). REC mode can be re-entered by pressing REC switch again.

Fresh (FRE) Switch

- When FRE switch is ON, FRE switch indicator turns ON, and air inlet is fixed to FRE.
- When FRE switch is pressed for approximately 1.5 seconds or longer, REC and FRE switch indicators blink twice. Then, automatic control mode is entered. Inlet status is displayed even during automatic control.
- When REC switch is turned ON, FRE switch is automatically turned OFF (fixed to REC mode). FRE mode can be re-entered by pressing FRE switch again.

DUAL Switch

- When the DUAL switch indicator is ON, the driver side and passenger side, temperature can each be set independently.
- When the DUAL switch indicator is OFF, the driver side setting temperature is applied to both sides.

DISCHARGE AIR FLOW

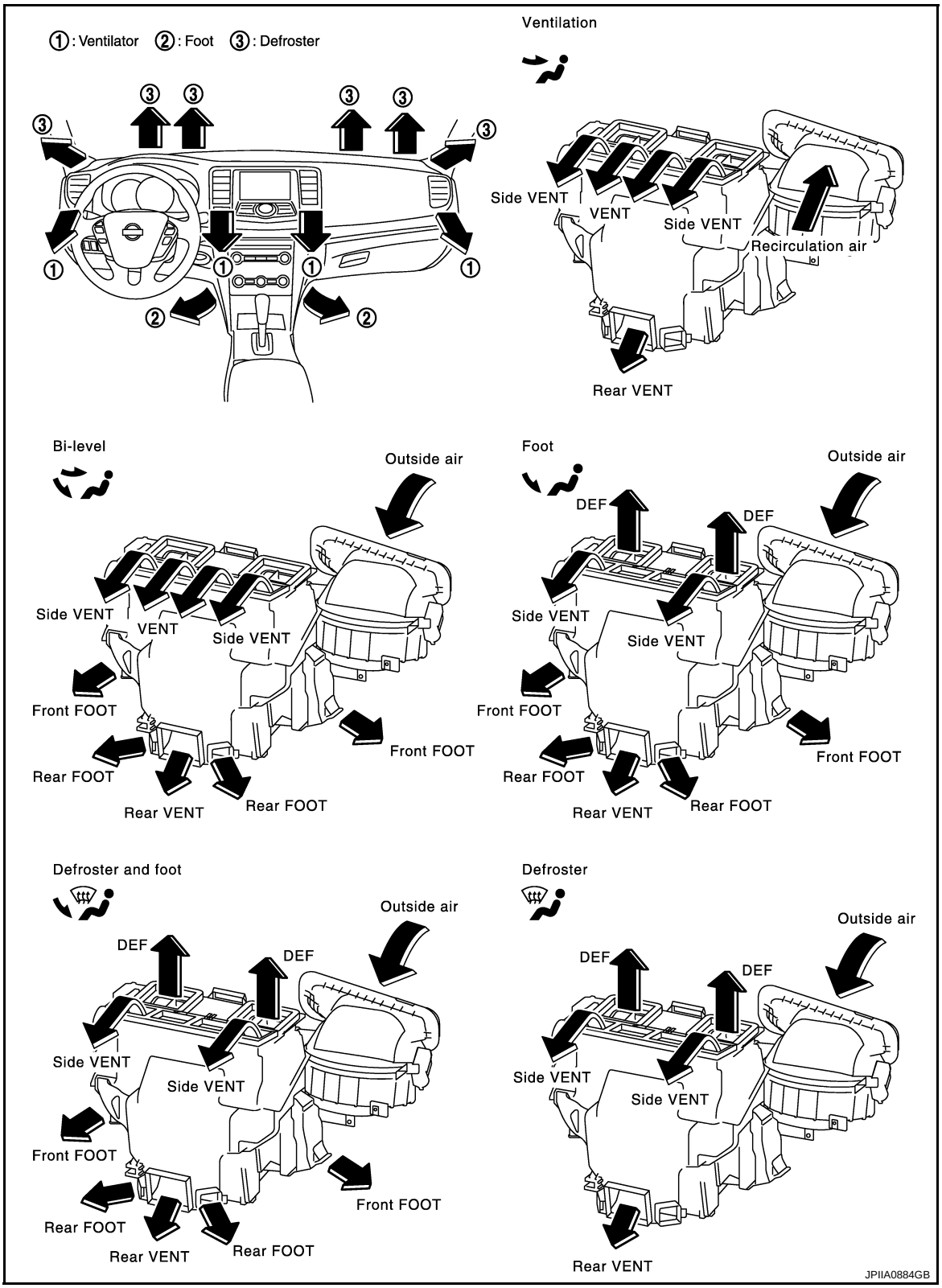

AIR DISTRIBUTION

Discharge air flow						
Mode position indication	Condition	Air outlet/distribution				
		VENT		FOOT		DEF
		Front	Rear	Front	Rear	
	DUAL switch: OFF Rear ventilator : OPEN	89%	11%	—	—	—
		46%	17%	27%	10%	—
		14%	16%	34%	14%	22%
		12%	16%	27%	13%	32%
		11%	12%	—	—	77%

JPIIA0877GB

SWITCHES AND THEIR CONTROL FUNCTION

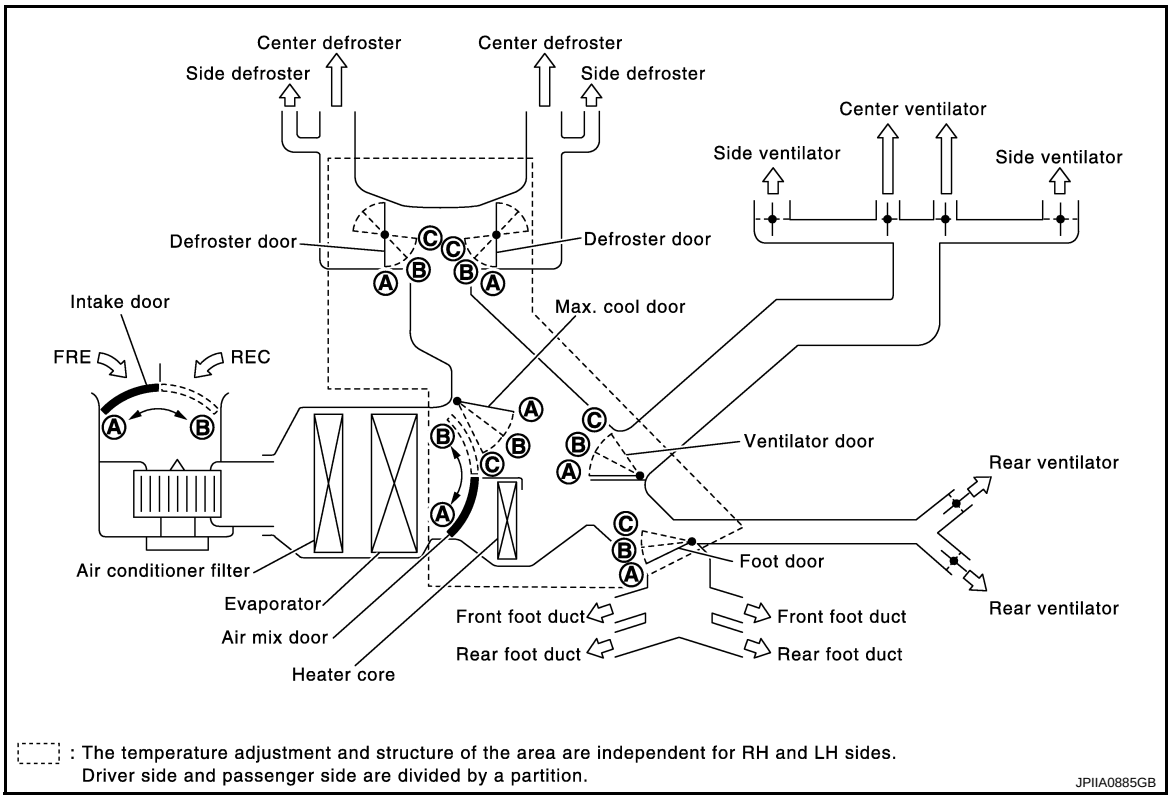

Position or switch / Door	DUAL switch	MODE switch				DEF switch		AUTO switch	Intake switch		Temperature control dial(Driver side)			Temperature control dial(Passenger side)			OFF switch
		VENT	B/L	FOOT	D/F	ON	OFF		REC	FRE							
		MODE															
							○				18℃ (60°F)	⇔	32℃ (90°F)	18℃ (60°F)	⇔	32℃ (90°F)	
Ventilator door	—	Ⓐ	Ⓑ	Ⓒ	Ⓒ	Ⓒ	—	AUTO	—		—			—			Ⓒ
Max.cool door	—	Ⓐ	Ⓑ	Ⓑ	Ⓑ	Ⓒ			—								Ⓑ
Defroster door	—	Ⓐ	Ⓐ	Ⓑ	Ⓑ	Ⓒ			—								Ⓑ
Foot door	—	Ⓐ	Ⓑ	Ⓒ	Ⓑ	Ⓐ			—		—			—			Ⓒ
Intake door	—	—				Ⓑ			Ⓐ*	Ⓑ*	—			—			Ⓑ
Air mix door (Driver side)	—	—				—			—		Ⓐ	AUTO	Ⓑ	—			—
Air mix door (Passenger side)	ON	—				—			—		—			Ⓐ	AUTO	Ⓑ	
	OFF	—				—			—		Ⓐ	AUTO	Ⓑ	—			

*: Inlet status is displayed by indicator when activating automatic control.

JSIIA1189GB

AIR CONDITIONER LAN CONTROL SYSTEM

The LAN (Local Area Network) system consists of the A/C auto amp., the mode door motor, the air mix door motors and the intake door motor.
A configuration of these components is as shown in the figure below.

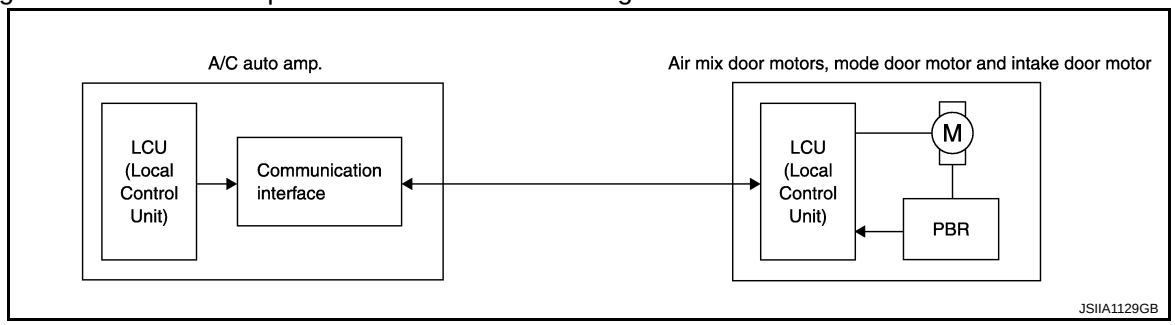

SYSTEM CONSTRUCTION

A small network exists between the A/C auto amp., the mode door motor, the air mix door motor and the intake door motor. The A/C auto amp. and motors are connected by data transmission lines and motor power supply lines. The LAN network is built through the ground circuits of each door motor.
Addresses, motor opening angle signals, motor stop signals and error checking messages are all transmitted through the data transmission lines connecting the A/C auto amp. and each door motor.
The following functions are contained in LCUs built into the mode door motor, the air mix door motors and the intake door motor.

- Address
- Motor opening angle signals
- Data transmission
- Motor stop and drive decision
- Opening angle sensor (PBR function)
- Comparison

- Decision (A/C auto amp. indicated value and motor opening angle comparison)

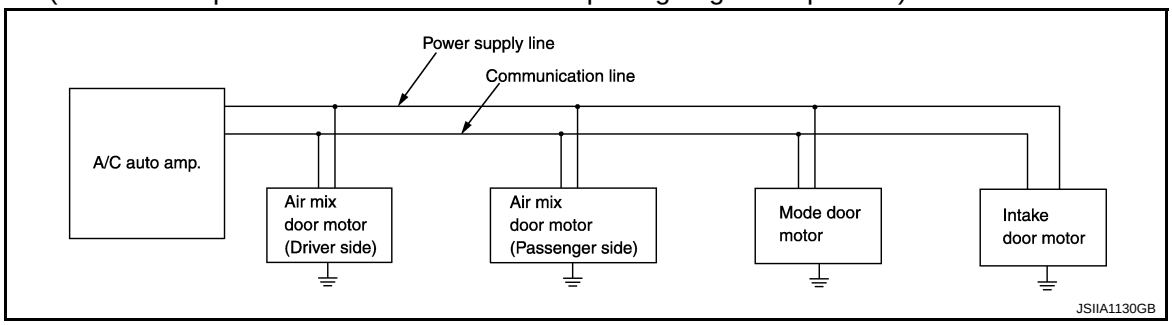

Operation

The A/C auto amp. receives data from each of the sensors. The A/C auto amp. sends mode door, the air mix door and the intake door opening angle data to the mode door motor LCU, the air mix door motor LCUs and the intake door motor LCU.

The mode door motor, the air mix door motors and the intake door motor read their respective signals according to the address signal. Opening angle indication signals received from the A/C auto amp. and each of the motor position sensors is compared by the LCUs in each door motor with the existing decision and opening angles. Next, HOT/COLD, DEF/VENT, OPEN/SHUT or FRE/REC operation is selected. The new selection data is returned to the A/C auto amp.

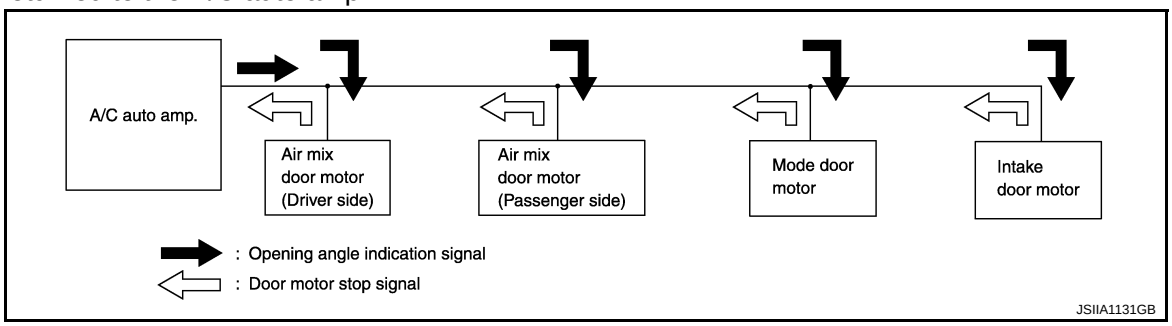

Transmission Data and Transmission Order

A/C auto amp. data is transmitted consecutively to each of the door motors following the form as shown in the figure below.

START:

- Initial compulsory signal is sent to each of the door motors.

ADDRESS:

- Data sent from the A/C auto amp. is selected according to data-based decisions made by the mode door motor, the air mix door motors and the intake door motor.
- If the addresses are identical, the opening angle data and error check signals are received by the door motor LCUs. The LCUs then make the appropriate error decision. If the opening angle data has no error, door control begins.
- If an error exists, the received data is rejected and the corrected data received. Finally, door control is based upon the corrected opening angle data.

OPENING ANGLE:

- Data that shows the indicated door opening angle of each door motor.

ERROR CHECK:

- In this procedure, transmitted and received data is checked for errors. Error data is then compiled. The error check prevents corrupted data from being used by the mode door motor, the air mix door motors and the intake door motor. Error data can be related to the following symptoms.
- Malfunction of electrical frequency
- Poor electrical connections
- Signal leakage from transmission lines
- Signal level fluctuation

STOP SIGNAL:

- At the end of each transmission, a stop operation, in-operation, or internal malfunction message is delivered to the A/C auto amp. This completes one data transmission and control cycle.

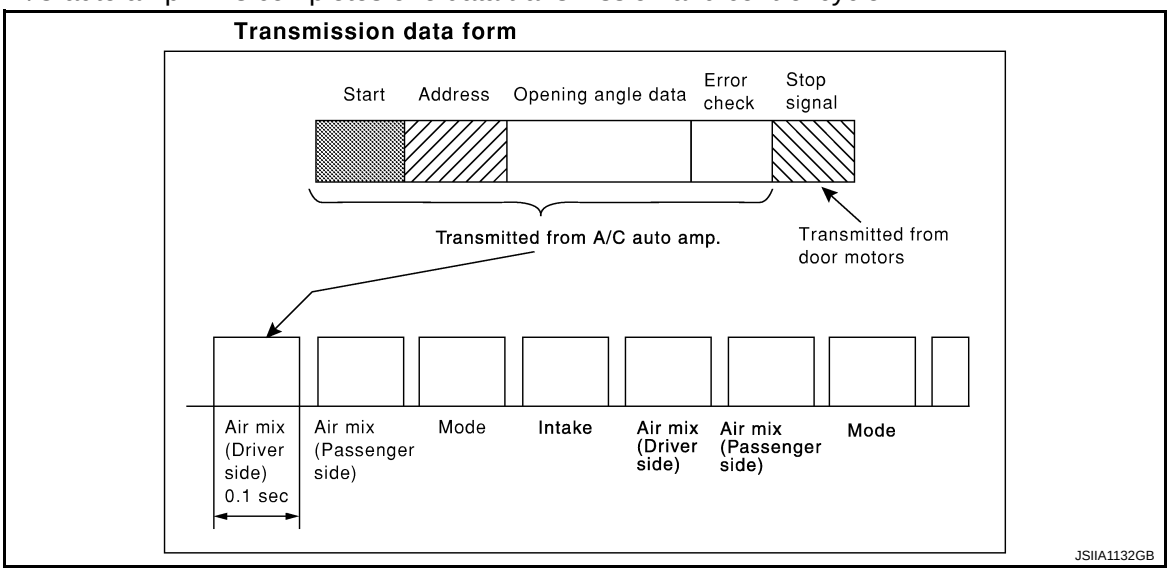

WITHOUT INTELLIGENT AIR CONDITIONER SYSTEM : Component Part Location

INFOID:0000000003884706

ENGINE COMPARTMENT

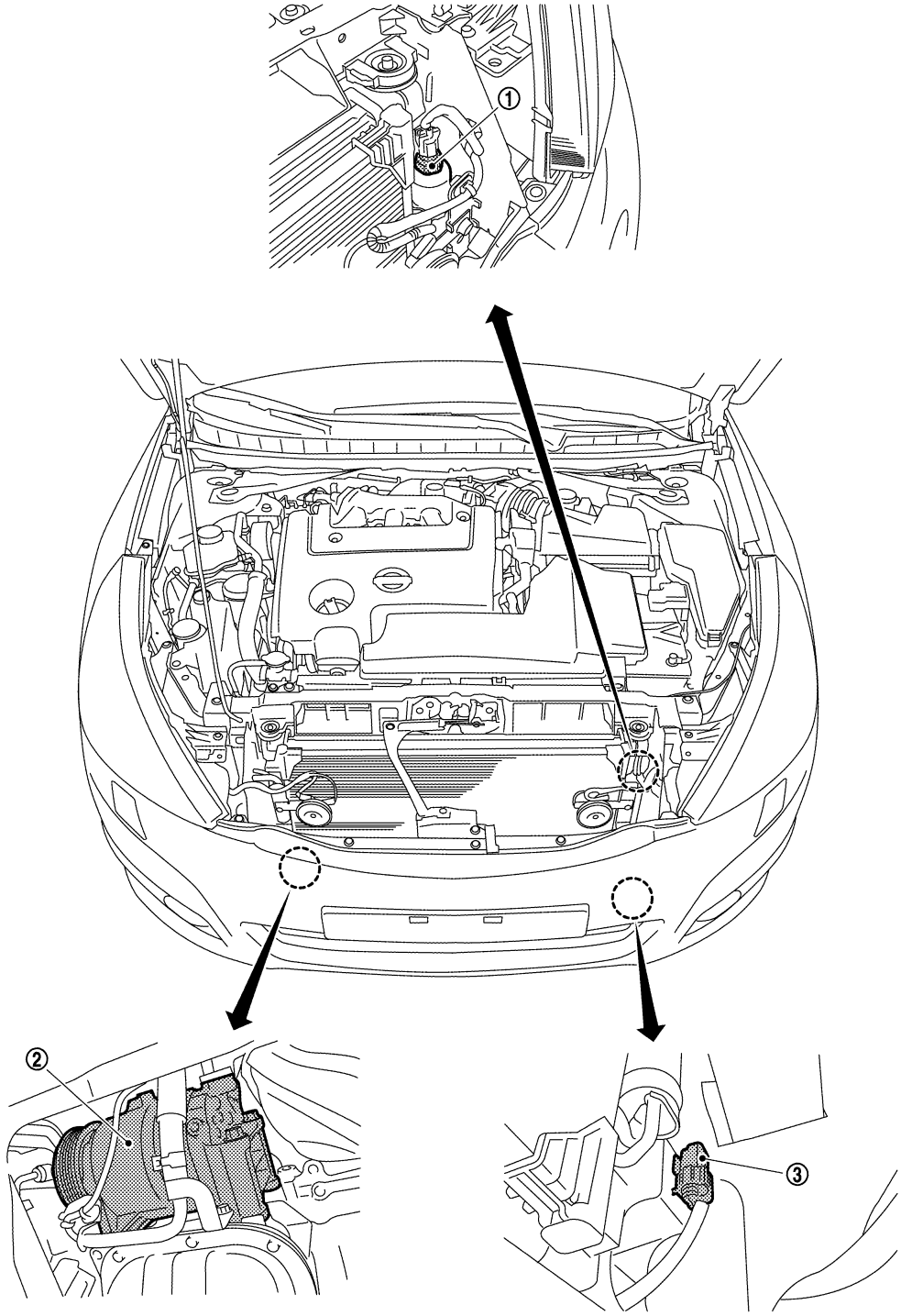

JPIIA0992ZZ

1. Refrigerant pressure sensor
2. Compressor (magnet clutch)
3. Ambient sensor

PASSENGER COMPARTMENT

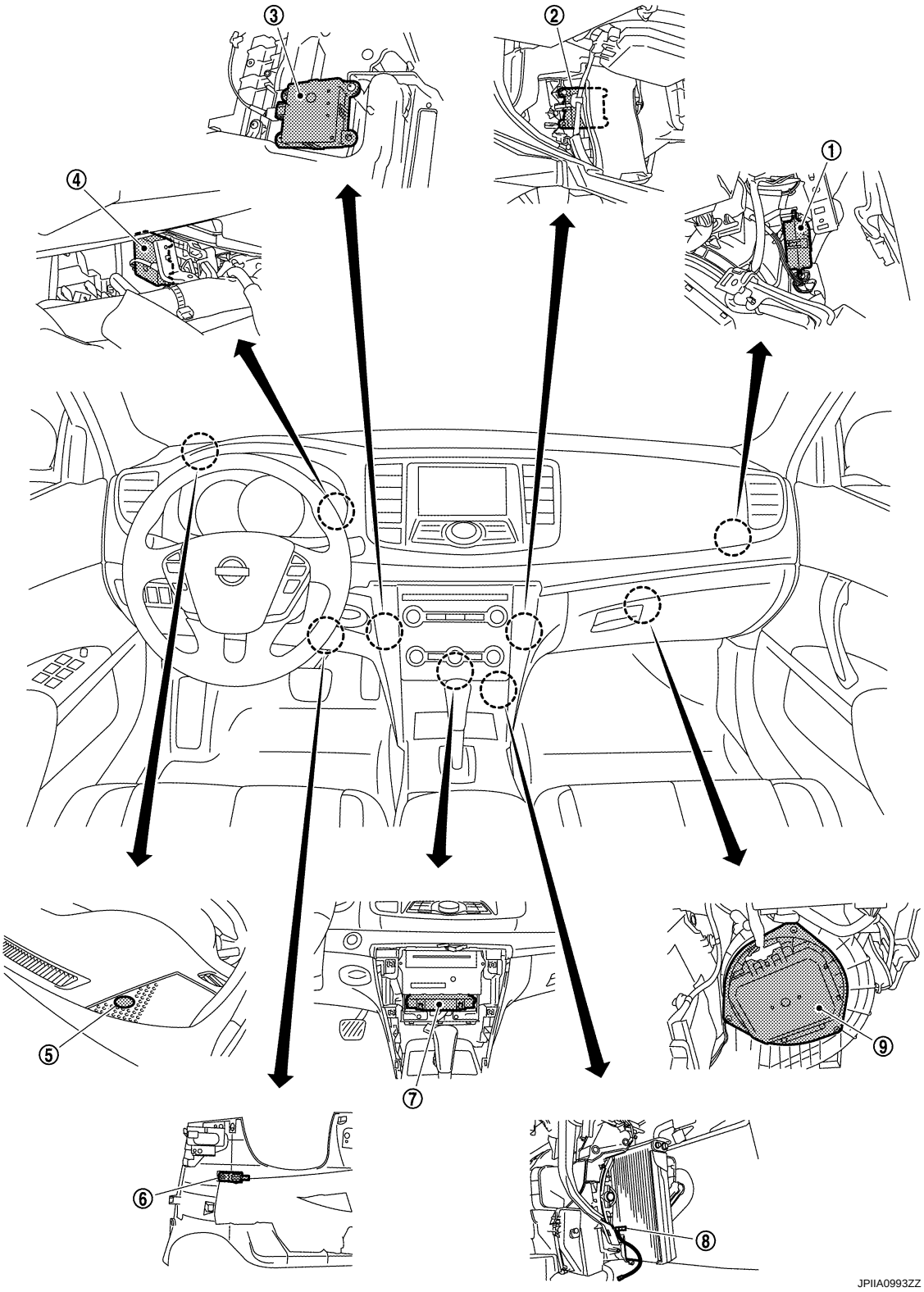

1. Intake door motor
2. Air mix door motor (passenger side)
3. Air mix door motor (driver side)
4. Mode door motor
5. Sunload sensor
6. In-vehicle sensor
7. A/C auto amp.
8. Intake sensor
9. Blower motor

WITHOUT INTELLIGENT AIR CONDITIONER SYSTEM : Component Description

INFOID:0000000003884707

Component	Description
Refrigerant pressure sensor	EC-348, "Description"
Compressor	HAC-197, "Description"
Ambient sensor	HAC-166, "Description"
Intake door motor	HAC-188, "Description"
Air mix door motor (driver side)	HAC-181, "Description"
Air mix door motor (passenger side)	HAC-183, "Description"
Mode door motor	HAC-185, "Description"
Sunload sensor	HAC-178, "Description"
In-vehicle sensor	HAC-169, "Description"
A/C auto amp.	HAC-192, "Description"
Intake sensor	HAC-172, "Description"
Blower motor	HAC-193, "Description"

WITH INTELLIGENT AIR CONDITIONER SYSTEM

WITH INTELLIGENT AIR CONDITIONER SYSTEM : System Diagram

INFOID:0000000003884703

CONTROL SYSTEM

The control system consists of input sensors, switches, the A/C auto amp. (microcomputer) and outputs. The relationship of these components is as shown in the figure below:

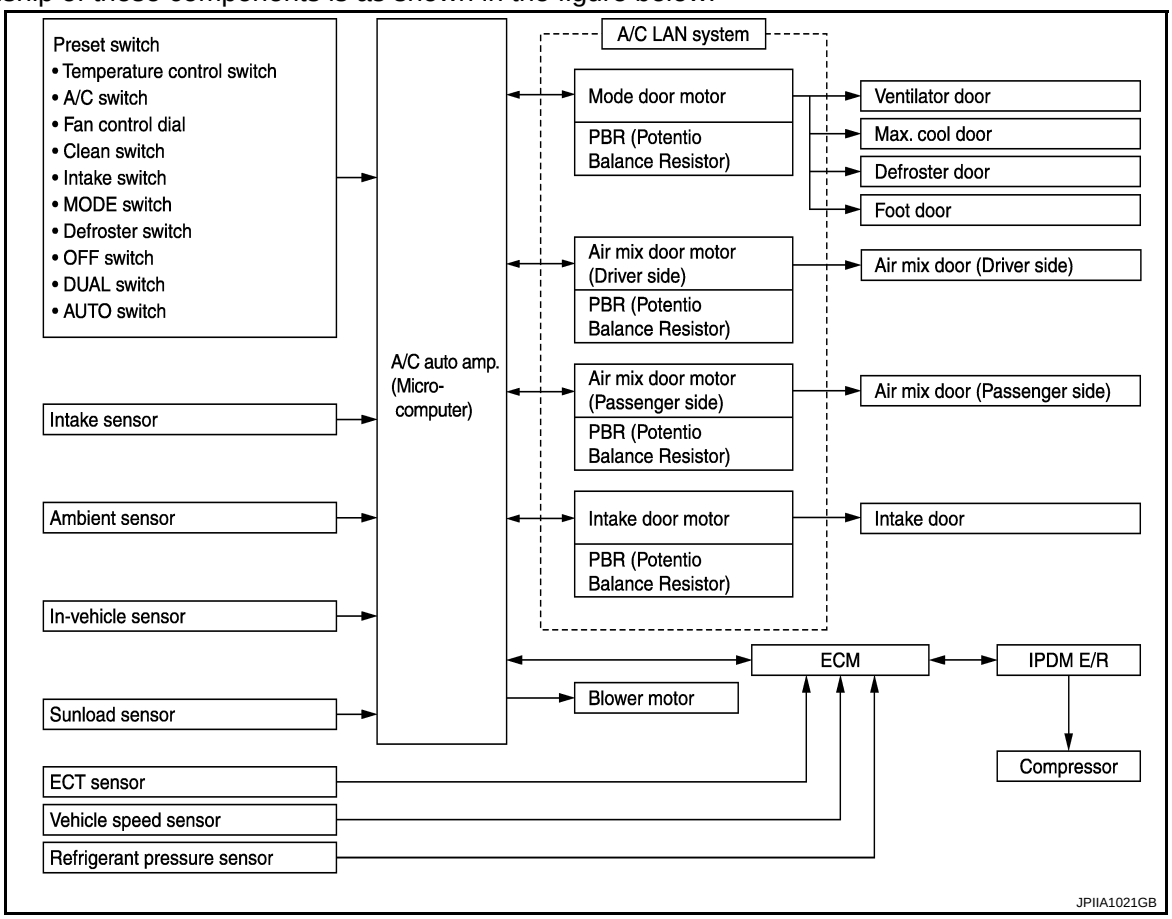

WITH INTELLIGENT AIR CONDITIONER SYSTEM : System Description

INFOID:0000000003884705

CONTROL OPERATION

Display

The operation status of the system is displayed on the screen.

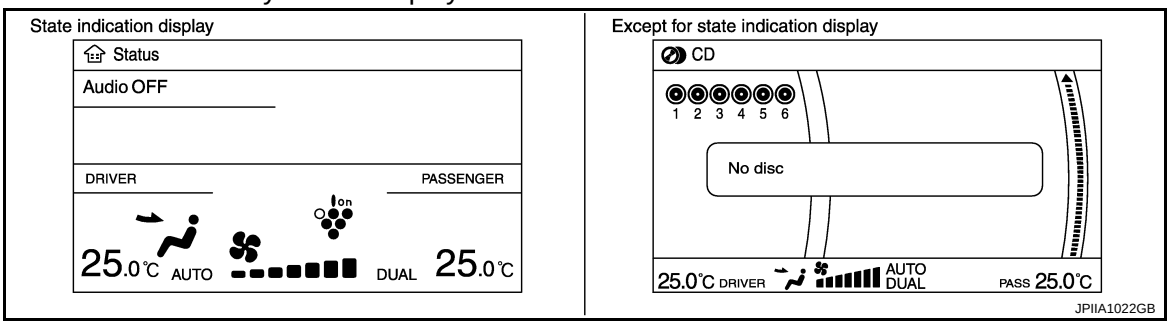

Preset Switch

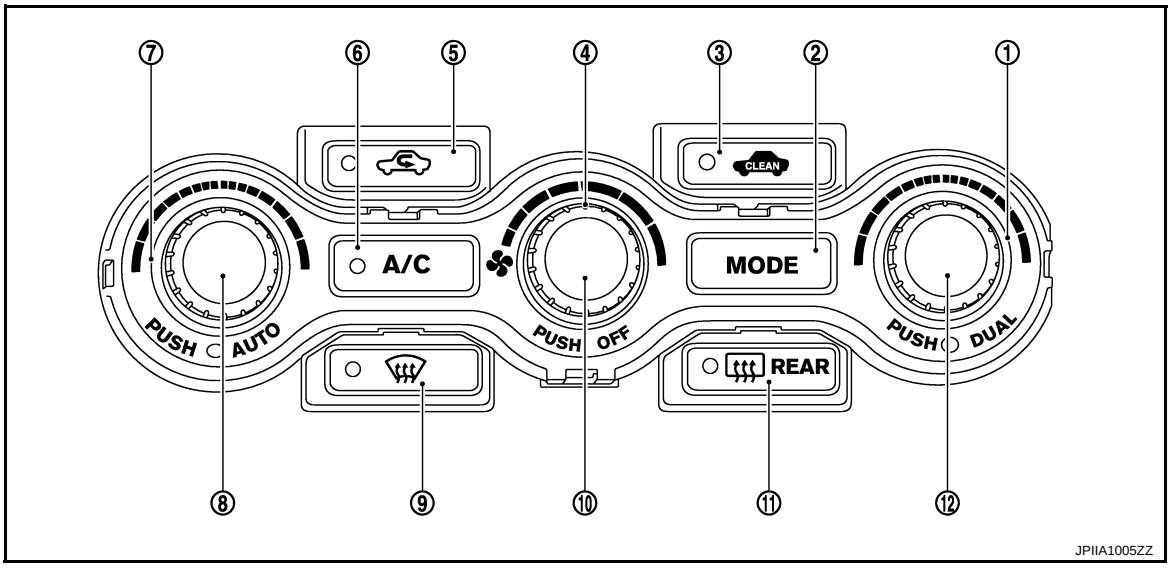

1.	Temperature control dial (passenger side)	2.	MODE switch	3.	CLEAN switch
4.	Fan control dial	5.	Intake switch	6.	A/C switch
7.	Temperature control dial (driver side)	8.	AUTO switch	9.	Defroster (DEF) switch
10.	OFF switch	11.	Rear window defogger switch	12.	DUAL switch

MODE Switch

The air discharge outlets are controlled with this switch.

Temperature Control Dial (Driver Side)

The set temperature is increased or decreased with this dial.

Temperature Control Dial (Passenger Side)

- The set temperature is increased or decreased with this dial.
- When the temperature control dial is turned, DUAL switch indicator is turned ON.

AUTO Switch

- The compressor, intake door, air mix doors, mode doors and blower speed are automatically controlled so that the in-vehicle temperature will reach, and be maintained at the set temperature selected by the operator.
- When pressing the AUTO switch, air inlet, air outlet, fan speed, and discharge air temperature are automatically controlled.

Defroster (DEF) Switch

Mode doors are set to the defrost position with this switch. Also, intake door is set to the outside air position, and compressor turns ON.

CLEAN Switch

- When the blower motor is operated, the indicator lamp of the clean switch illuminates by pressing the clean switch. The air inlets are fixed to recirculation for approximately 5 minutes. After approximately 5 minutes have passed, they change to the automatic re-circulation control system. The Plasmacluster ion generation function operates for approximately 30 minutes (Blower motor operate) in clean mode after the clean switch is ON. After approximately 30 minutes have passed, the vehicle is driven between ion control mode (approximately 15 minutes) and clean mode (approximately 30 minutes) alternately.
  NOTE:
  When the clean switch is not ON
  - Ignition switch: OFF
  - Blower motor: OFF
  - Mode position: Defroster (DEF)
  - Ambient temperature: At about 0°C or below (Reactivate at about 2°C or above)
  - When the gas sensor is malfunctioning
- The Plasmacluster ion generation function changes automatically to the ion control mode by turning the clean switch OFF, and then operates for approximately 15 minutes. Then, it is operated between the clean mode (approximately 15 minutes) and clean mode (approximately 15 minutes) alternately.
- When the clean switch is ON, the A/C switch is also turned ON in synchronization with the clean switch.
  NOTE:
  The A/C switch becomes deactivate and the clean switch is turned OFF in synchronization with the A/C switch by the clean switch interlocking movement change function.
- Press the intake switch or defroster (DEF) switch when releasing the automatic recirculation control system.

A/C Switch

Compressor turns ON or OFF with this switch.
(Pressing the A/C switch when the A/C switch is ON turns OFF the A/C switch and compressor.)

Fan Control Dial

The blower speed is manually controlled with this dial. Seven speeds are available for manual control (as shown on the display screen).

OFF Switch

Compressor and blower turn OFF, intake door and the mode doors are automatically controlled.

Rear Window Defogger Switch

When indicator is ON, rear window is defogged.

Intake Switch

- When the intake switch is ON, the intake switch indicator is turned ON, and air inlet is set to REC.
- When the intake switch is pressed again, the intake switch indicator is turned OFF, and air inlet is set to FRE.
- When the intake switch indicator is turned OFF, shifting mode position to DEF, intake switch is automatically turned OFF (set to FRE mode). REC mode can be re-entered by pressing intake switch again.

DUAL Switch

- When the DUAL switch indicator is ON, the driver side and passenger side, temperature can each be set independently.
- When the DUAL switch indicator is OFF, the driver side setting temperature is applied to both sides.

DISCHARGE AIR FLOW

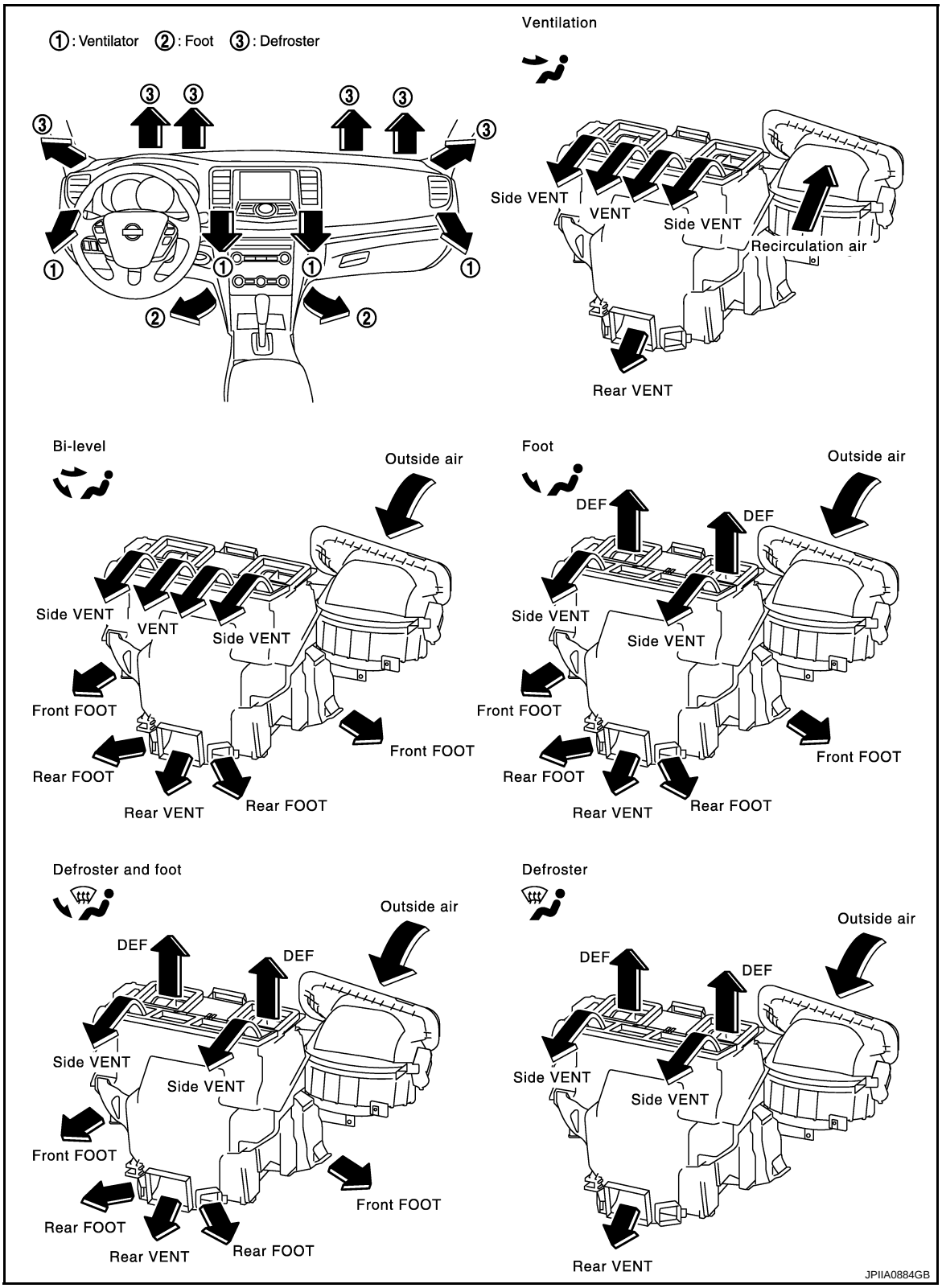

SWITCHES AND THEIR CONTROL FUNCTION

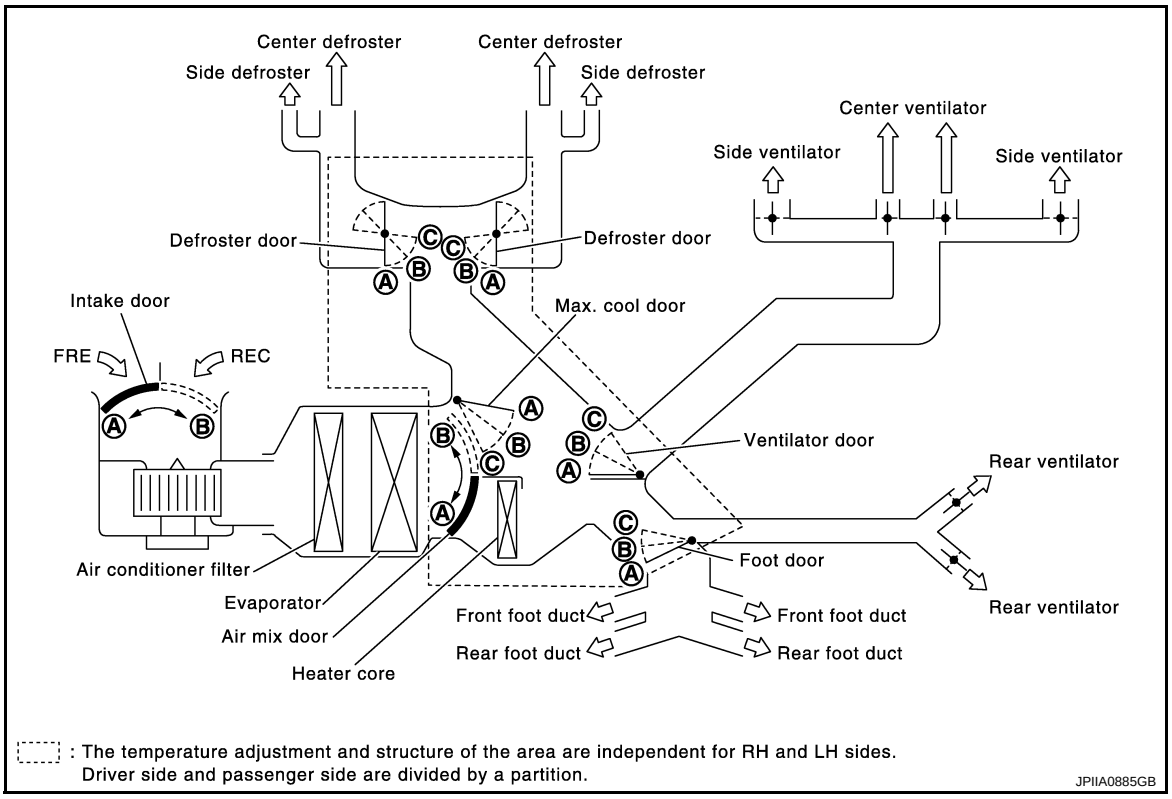

Position or switch / Door	DUAL switch	MODE switch				DEF switch		AUTO switch	Clean switch	Intake switch		Temperature control dial(Driver side)			Temperature control dial(Passenger side)			OFF switch
		VENT	B/L	FOOT	D/F	ON	OFF			ON	OFF							
		MODE																
							○				○	18℃ (60°F)	⇔	32℃ (90°F)	18℃ (60°F)	⇔	32℃ (90°F)	
Ventilator door	—	Ⓐ	Ⓑ	Ⓒ	Ⓒ	Ⓒ			—	—								Ⓒ
Max.cool door	—	Ⓐ	Ⓑ	Ⓑ	Ⓑ	Ⓒ			—	—		—			—			Ⓑ
Defroster door	—	Ⓐ	Ⓐ	Ⓑ	Ⓑ	Ⓒ			—	—								Ⓑ
Foot door	—	Ⓐ	Ⓑ	Ⓒ	Ⓑ	Ⓐ	—	AUTO	—	—		—			—			Ⓒ
Intake door	—	—				Ⓑ			AUTO*1	Ⓐ*2	Ⓑ*2	—			—			Ⓑ
Air mix door (Driver side)	—	—				—			—	—		Ⓐ	AUTO	Ⓑ	—			
Air mix door (Passenger side)	ON	—				—			—	—		—			Ⓐ	AUTO	Ⓑ	—
	OFF	—				—			—	—		Ⓐ	AUTO	Ⓑ	—			

*1: Intake door control applies a gas sensor.
*2: Inlet status is displayed by indicator when activating automatic control.

JSIIA1190GB

AIR CONDITIONER LAN CONTROL SYSTEM

The LAN (Local Area Network) system consists of the A/C auto amp., the mode door motor, the air mix door motors and the intake door motor.

A configuration of these components is as shown in the figure below.

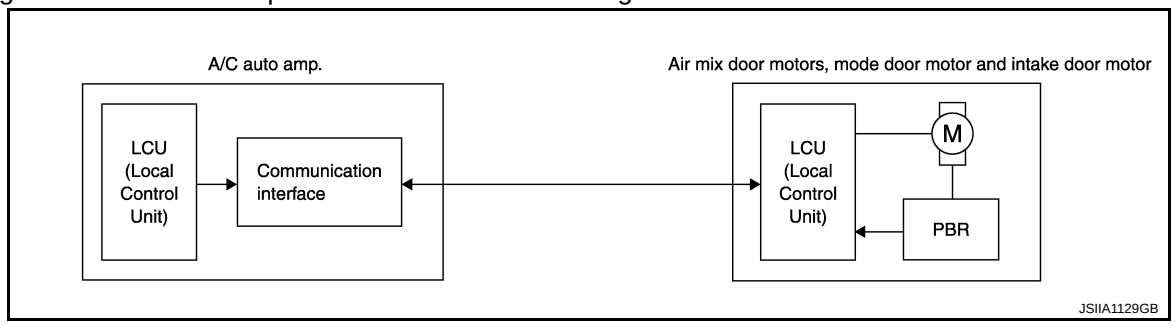

SYSTEM CONSTRUCTION

A small network exists between the A/C auto amp., the mode door motor, the air mix door motor and the intake door motor. The A/C auto amp. and motors are connected by data transmission lines and motor power supply lines. The LAN network is built through the ground circuits of each door motor.

Addresses, motor opening angle signals, motor stop signals and error checking messages are all transmitted through the data transmission lines connecting the A/C auto amp. and each door motor.

The following functions are contained in LCUs built into the mode door motor, the air mix door motors and the intake door motor.

- Address
- Motor opening angle signals
- Data transmission
- Motor stop and drive decision
- Opening angle sensor (PBR function)
- Comparison
- Decision (A/C auto amp. indicated value and motor opening angle comparison)

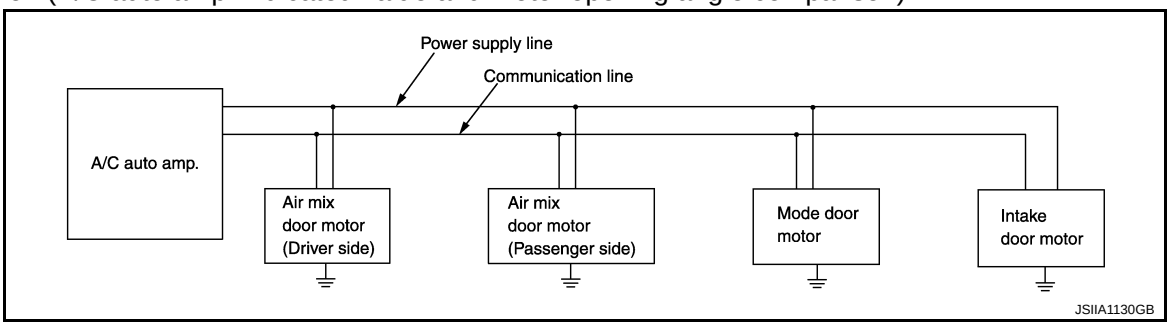

Operation

The A/C auto amp. receives data from each of the sensors. The A/C auto amp. sends mode door, the air mix door and the intake door opening angle data to the mode door motor LCU, the air mix door motor LCUs and the intake door motor LCU.

The mode door motor, the air mix door motors and the intake door motor read their respective signals according to the address signal. Opening angle indication signals received from the A/C auto amp. and each of the motor position sensors is compared by the LCUs in each door motor with the existing decision and opening angles. Next, HOT/COLD, DEF/VENT, OPEN/SHUT or FRE/REC operation is selected. The new selection data is returned to the A/C auto amp.

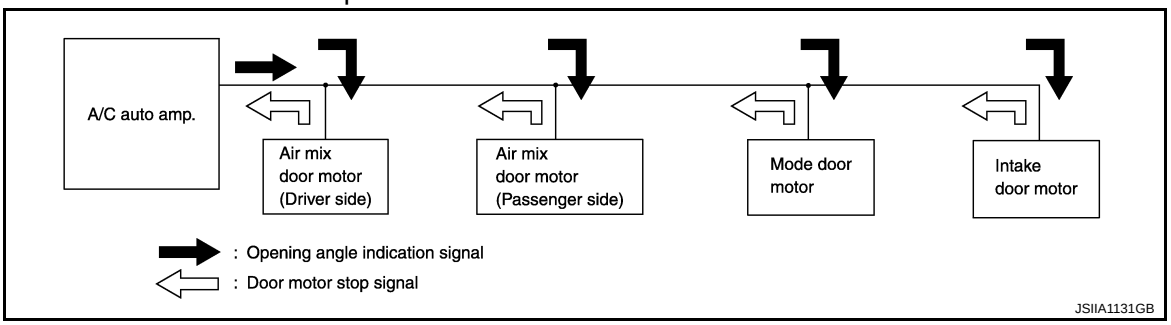

Transmission Data and Transmission Order

A/C auto amp. data is transmitted consecutively to each of the door motors following the form as shown in the figure below.

START:
- Initial compulsory signal is sent to each of the door motors.

ADDRESS:
- Data sent from the A/C auto amp. is selected according to data-based decisions made by the mode door motor, the air mix door motors and the intake door motor.
- If the addresses are identical, the opening angle data and error check signals are received by the door motor LCUs. The LCUs then make the appropriate error decision. If the opening angle data has no error, door control begins.
- If an error exists, the received data is rejected and the corrected data received. Finally, door control is based upon the corrected opening angle data.

OPENING ANGLE:
- Data that shows the indicated door opening angle of each door motor.

ERROR CHECK:
- In this procedure, transmitted and received data is checked for errors. Error data is then compiled. The error check prevents corrupted data from being used by the mode door motor, the air mix door motors and the intake door motor. Error data can be related to the following symptoms.
- Malfunction of electrical frequency
- Poor electrical connections
- Signal leakage from transmission lines
- Signal level fluctuation

STOP SIGNAL:
- At the end of each transmission, a stop operation, in-operation, or internal malfunction message is delivered to the A/C auto amp. This completes one data transmission and control cycle.

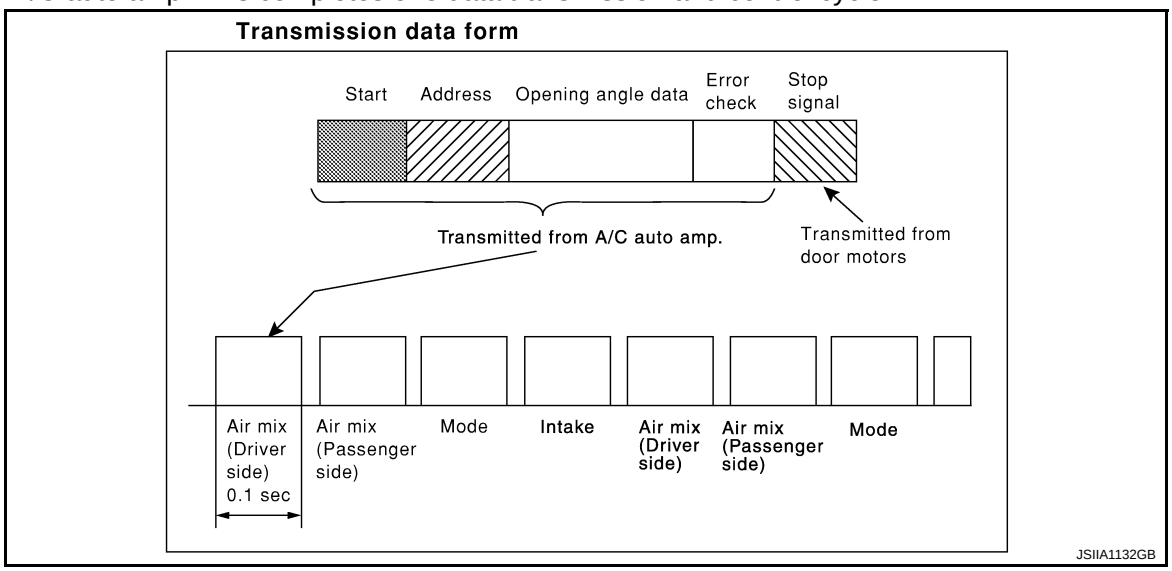

WITH INTELLIGENT AIR CONDITIONER SYSTEM : Component Part Location

INFOID:0000000003885178

ENGINE COMPARTMENT

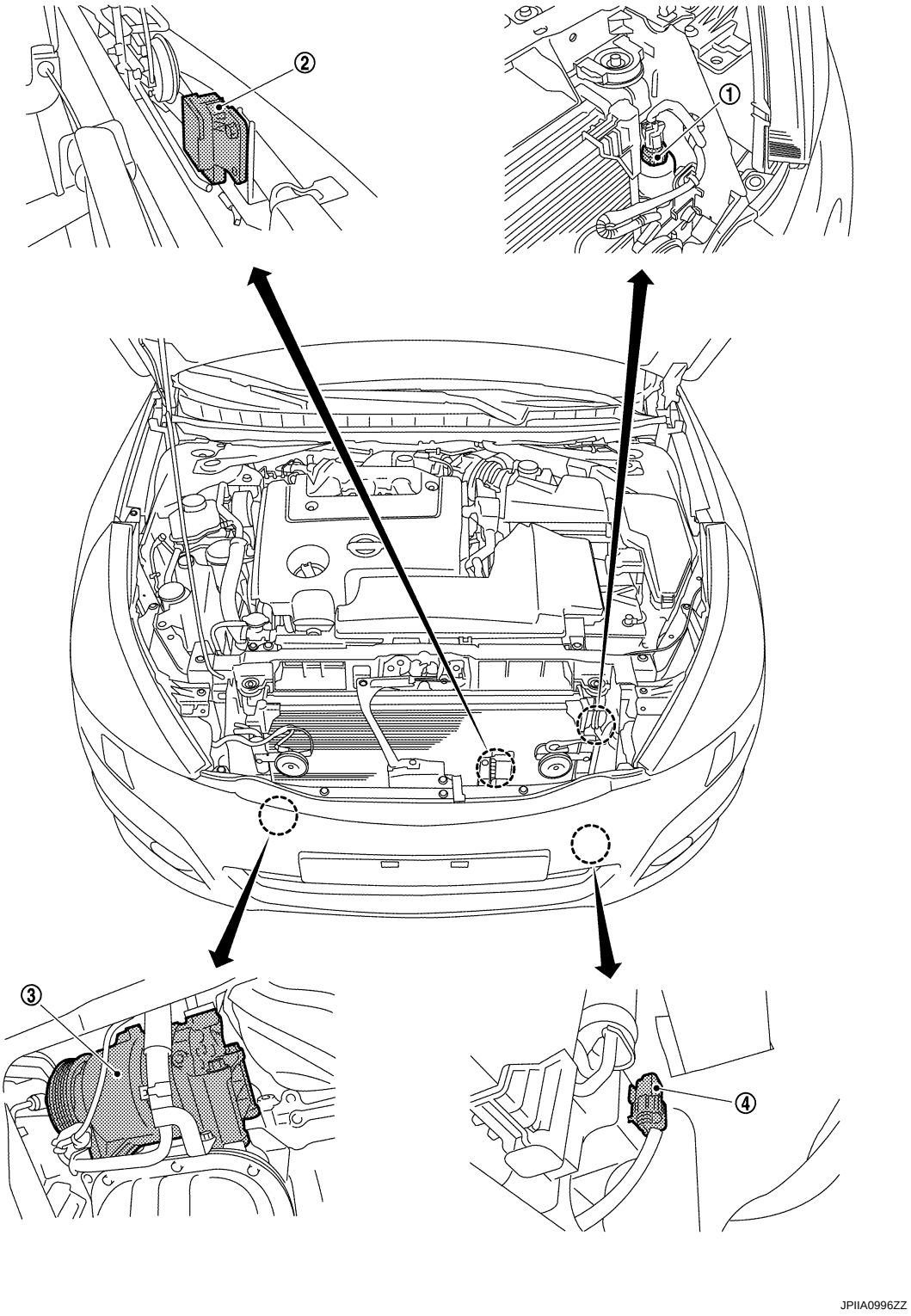

1. Refrigerant pressure sensor
2. Gas sensor
3. Compressor (magnet clutch)
4. Ambient sensor

PASSENGER COMPARTMENT

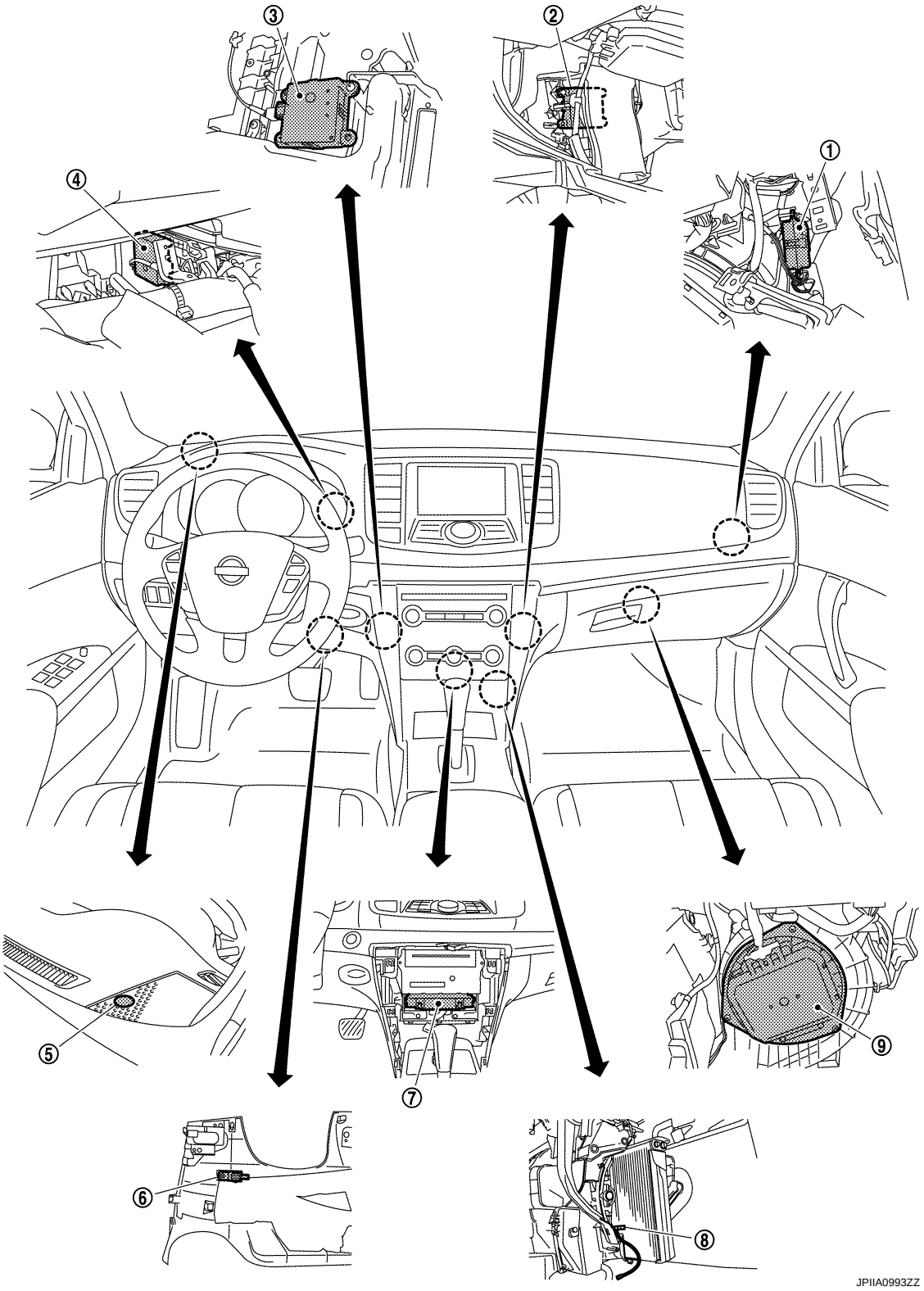

1. Intake door motor
2. Air mix door motor (passenger side)
3. Air mix door motor (driver side)
4. Mode door motor
5. Sunload sensor
6. In-vehicle sensor
7. A/C auto amp.
8. Intake sensor
9. Blower motor

WITH INTELLIGENT AIR CONDITIONER SYSTEM : Component Description

INFOID:0000000003885179

Component	Description
Refrigerant pressure sensor	EC-348, "Description"
Gas sensor	HAC-175, "WITH INTELLIGENT AIR CONDITIONER SYSTEM : Description"
Compressor	HAC-197, "Description"
Ambient sensor	HAC-166, "Description"
Intake door motor	HAC-188, "Description"
Air mix door motor (driver side)	HAC-181, "Description"
Air mix door motor (passenger side)	HAC-183, "Description"
Mode door motor	HAC-185, "Description"
Sunload sensor	HAC-178, "Description"
In-vehicle sensor	HAC-169, "Description"
A/C auto amp.	HAC-192, "Description"
Intake sensor	HAC-172, "Description"
Blower motor	HAC-193, "Description"

PLASMACLUSTER SYSTEM
WITH INTELLIGENT AIR CONDITIONER SYSTEM

WITH INTELLIGENT AIR CONDITIONER SYSTEM : System Diagram

INFOID:0000000003884708

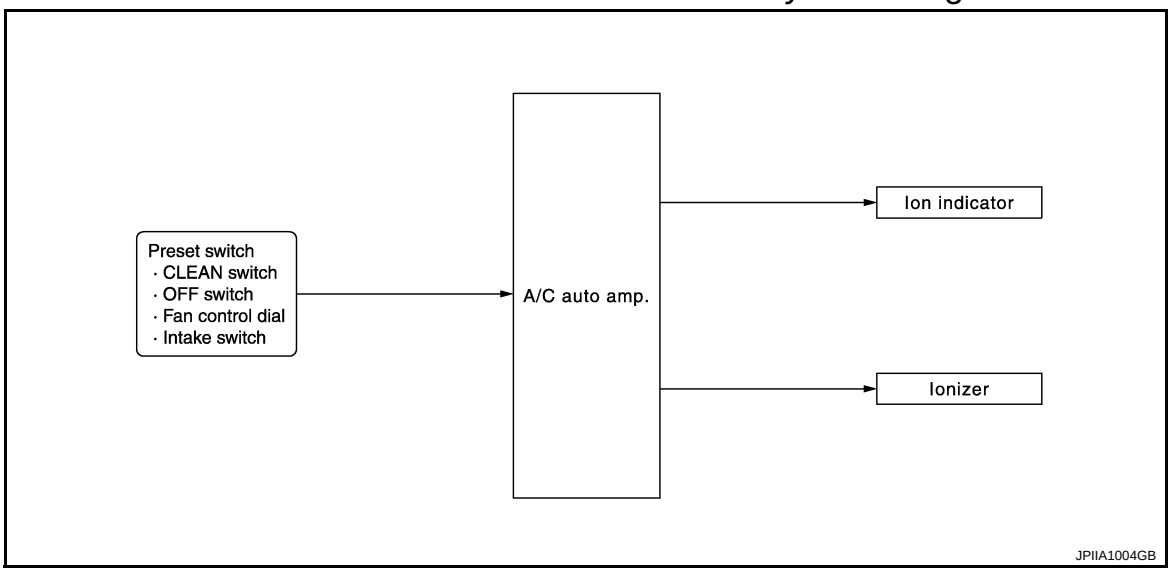

WITH INTELLIGENT AIR CONDITIONER SYSTEM : System Description

INFOID:0000000003884709

- Plasmacluster™ ion generation function, which generates ions inactivating bacteria and supplies to the passenger compartment through air blown from air conditioner, has been adopted.
- Airborne mold and bacteria in the passenger compartment are inactivated by the effect of Plasmacluster™ ion.
- Plasmacluster™ ion generation function is switched between 2 operation modes (clean mode and ion control mode) automatically, and maintain the ion balance in the passenger compartment close to that in nature.
- The operating condition is displayed in the “ION” indicator in the display.

NOTE:

- Plasmacluster™ ion technology developed by Sharp Corporation is installed in this item.
- Plasmacluster™ is a trademark of Sharp Corporation.

OPERATION DESCRIPTION

- The Plasmacluster™ ion generation function operates synchronized with the blower motor. The Plasmacluster™ ion generation function operates when the blower motor operates.
- 2 ion generation modes (clean mode and ion control mode) are switched every 15 minutes while blower motor turns ON with ignition switch ON.
- When the clean switch is turned ON, Plasmacluster™ ion generation function extends the operation time of the clean mode to approximately 30 minutes for deactivating impurities more actively.

Condition	Clean mode	Ion control mode
Clean switch: OFF	15 minutes	15 minutes
Clean switch: ON	30 minutes	15 minutes

NOTE:

When the clean switch is not ON
- Ignition switch: OFF
- Blower motor: OFF
- Mode position: Defroster (DEF)
- Ambient temperature: At about 0°C (32°F) or below [Reactivate at about 2°C (36°F) or above]
- When the gas sensor is malfunctioning

- When the blower motor is stopped, the Plasmacluster™ ion generation function also stops operating (“CLEAN” and “ION” indicators are OFF).

Clean mode	Emits positive and negative ions into air for deactivating impurities actively.
Ion control mode	Emits more negative ions after deactivating impurities actively in clean mode.

1. Clean mode operation
   Ion indicator (blue) (1) in the display is turns ON as per the following.
   - Approximately 15 minutes after starting the blower motor.
   - Approximately 30 minutes after the clean switch is turned ON while the blower motor is operating.
   - Clean mode is switched to operate, 15 minutes after ion control mode in operation.
2. Ion control mode operation
   Ion indicator (green) in the display is turns ON as per the followings.
   - Ion control mode is switched to operate, 15 minutes after clean mode in operation.
   - After approximately 30 seconds of clean mode operation time has passed while the clean switch is ON.

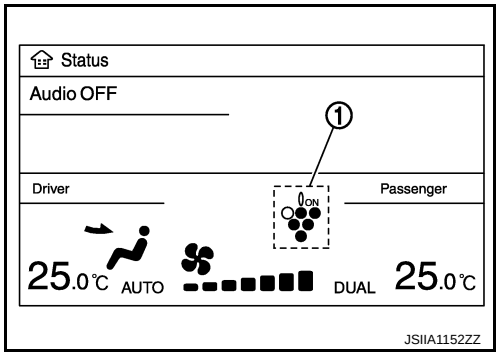

WITH INTELLIGENT AIR CONDITIONER SYSTEM : Component Part Location

INFOID:0000000003884710

PASSENGER COMPARTMENT

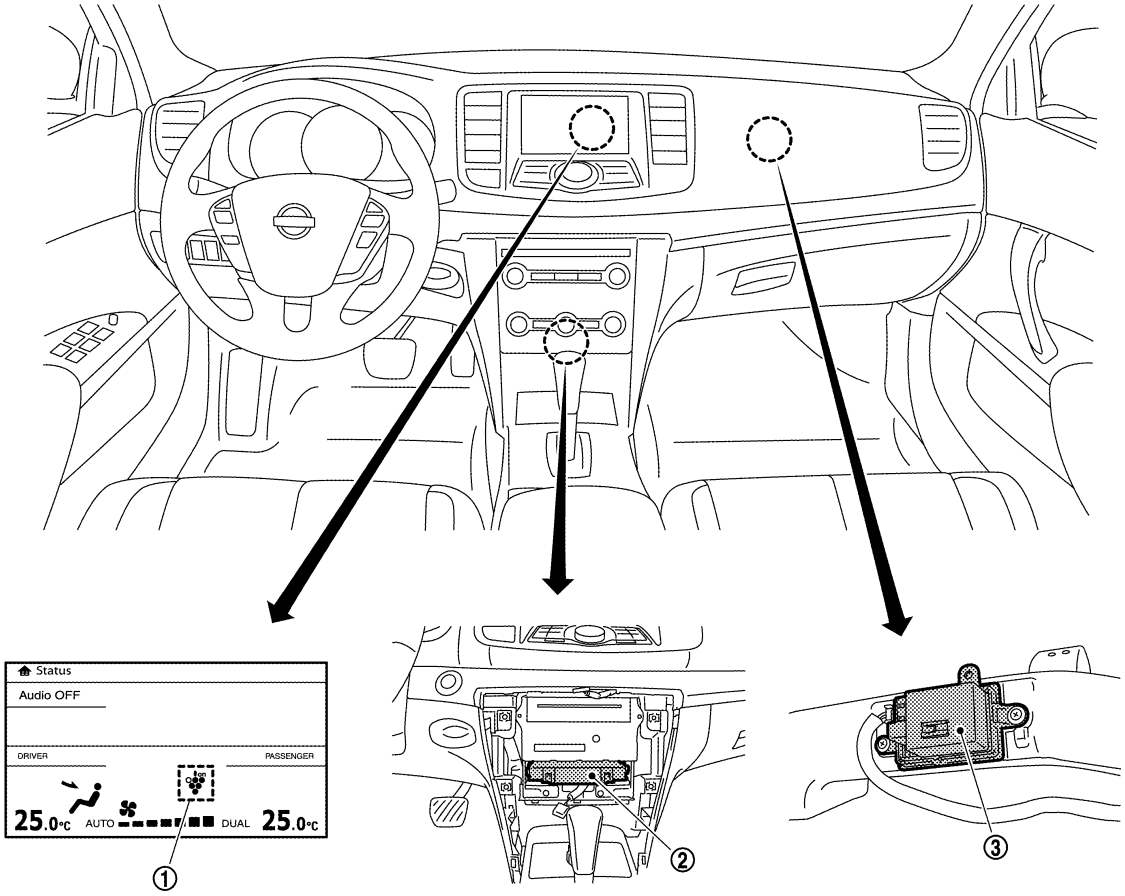

JPIIA0998ZZ

1. Ion indicator
2. A/C auto amp.
3. Ionizer

WITH INTELLIGENT AIR CONDITIONER SYSTEM : Component Description

INFOID:0000000003884711

Component	Description
A/C auto amp.	The A/C auto amp. controls ionizer ON/OFF and shifts an ion generation function.
Ion indicator	Plasmacluster ion generation function operating condition is displayed in the ion indicator in the display.
Ionizer	HAC-199, "WITH INTELLIGENT AIR CONDITIONER SYSTEM : Description"

MODE DOOR CONTROL SYSTEM

System Diagram

INFOID:0000000003884714

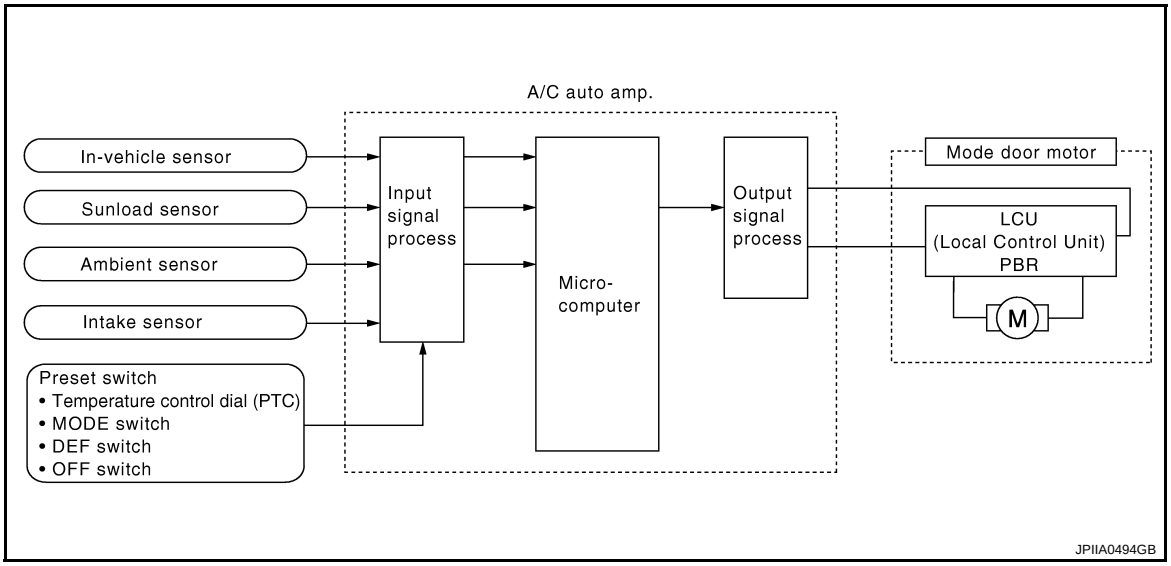

System Description

INFOID:0000000003884715

The mode door is automatically controlled by the temperature setting, ambient temperature, in-vehicle temperature, intake temperature and amount of sunload.

SYSTEM OPERATION

- The A/C auto amp. receives data from each of the sensors.
- The A/C auto amp. sends the air mix door, the mode door and the intake door opening angle data to the air mix door motor LCUs, the mode door motor LCU and the intake door motor LCU.
- The air mix door motors, the mode door motor and the intake door motor read their respective signals according to the address signal. Opening angle indication signals received from the A/C auto amp. and each of the motor position sensors are compared by the LCUs in each door motor with the existing decision and opening angles.
- Next, HOT/COLD, DEF/VENT, OPEN/SHUT or FRE/REC operations is selected. The newly selected data is returned to the A/C auto amp.

Door Motor Circuit

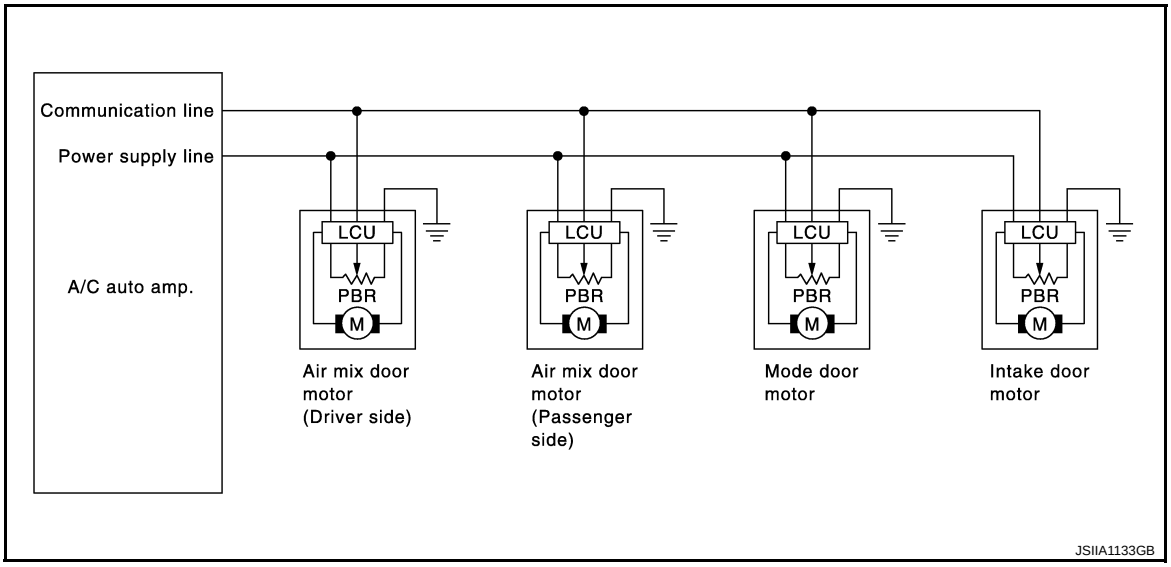

Mode Door Control Specification

Mode position can be selected manually by pressing the MODE switch or the DEF switch on the A/C control. This the setting of a mode position. Pressing the AUTO switch allows automatic control by the A/C auto amp. During the automatic control of a mode position, a mode door position (VENT, B/L, FOOT, or D/F) is selected based on a target the air mix door opening angle and sunload depending on the temperature calculated by the A/C auto amp. In addition, the D/F is selected to prevent windshield fogging only when ambient temperature is extremely low with mode position the FOOT.

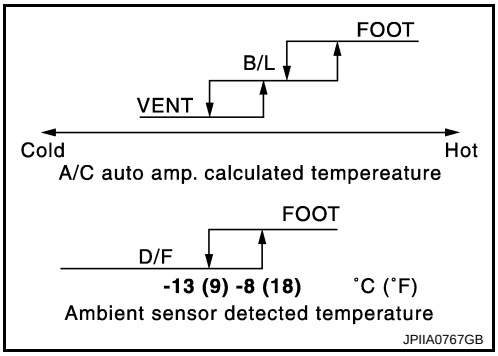

AIR MIX DOOR CONTROL SYSTEM

System Diagram

INFOID:0000000003884718

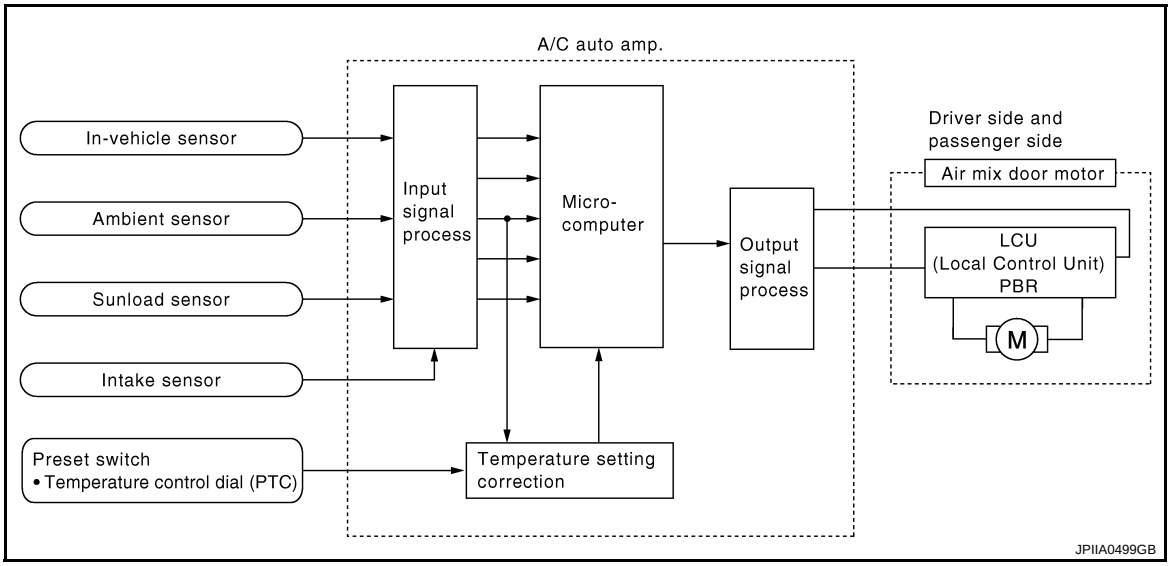

System Description

INFOID:0000000003884719

The air mix doors are automatically controlled so that in-vehicle temperature is maintained at a predetermined value by the temperature setting, ambient temperature, intake temperature and amount of sunload.

SYSTEM OPERATION

- The A/C auto amp. receives data from each of the sensors.
- The A/C auto amp. sends air mix door, the mode door and the intake door opening angle data to the air mix door motor LCUs, the mode door motor LCU and the intake door motor LCU.
- The air mix door motors, the mode door motor and the intake door motor read their respective signals according to the address signal. Opening angle indication signals received from the A/C auto amp. and each of the motor position sensors are compared by the LCUs in each door motor with the existing decision and opening angles.
- Next, HOT/COLD, DEF/VENT, OPEN/SHUT or FRE/REC operation is selected. The newly selected data is returned to the A/C auto amp.

Door Motor Circuit

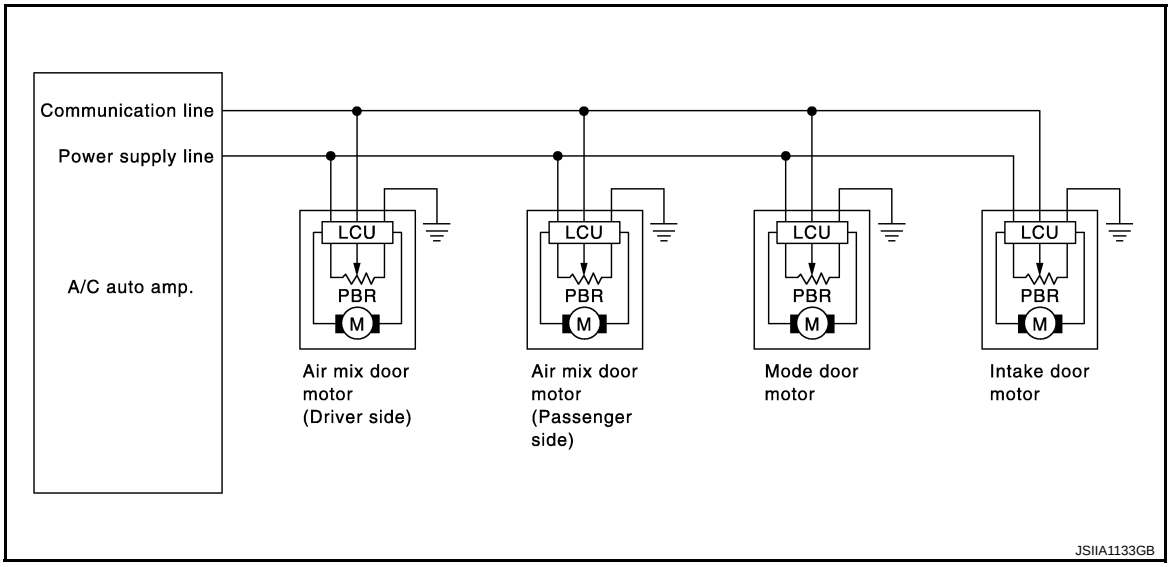

Air Mix Door Control Specification

When ignition switch is ON, the A/C auto amp. continuously and automatically controls temperatures regardless of air conditioner operational condition. When setting a target temperature with the temperature control dial, the A/C auto amp. corrects the set temperature and decides a target air mix door opening angle. The A/C auto amp. controls air mix door according to the target air mix door opening angle and current air mix door opening angle, keeping an optimum air mix door opening angle. When the temperature is set at 18°C (60°F), air mix door is set on full cold, and when the temperature is set at 32°C (90°F), it is set to full hot.

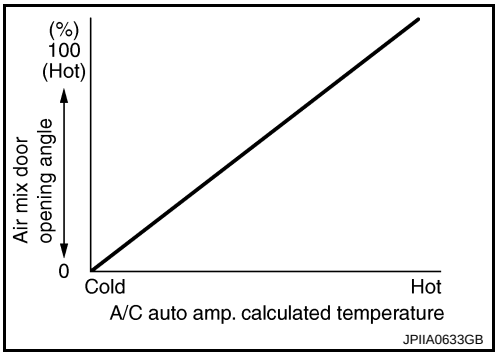

INTAKE DOOR CONTROL SYSTEM
WITHOUT INTELLIGENT AIR CONDITIONER SYSTEM

WITHOUT INTELLIGENT AIR CONDITIONER SYSTEM : System Diagram

INFOID:0000000003884722

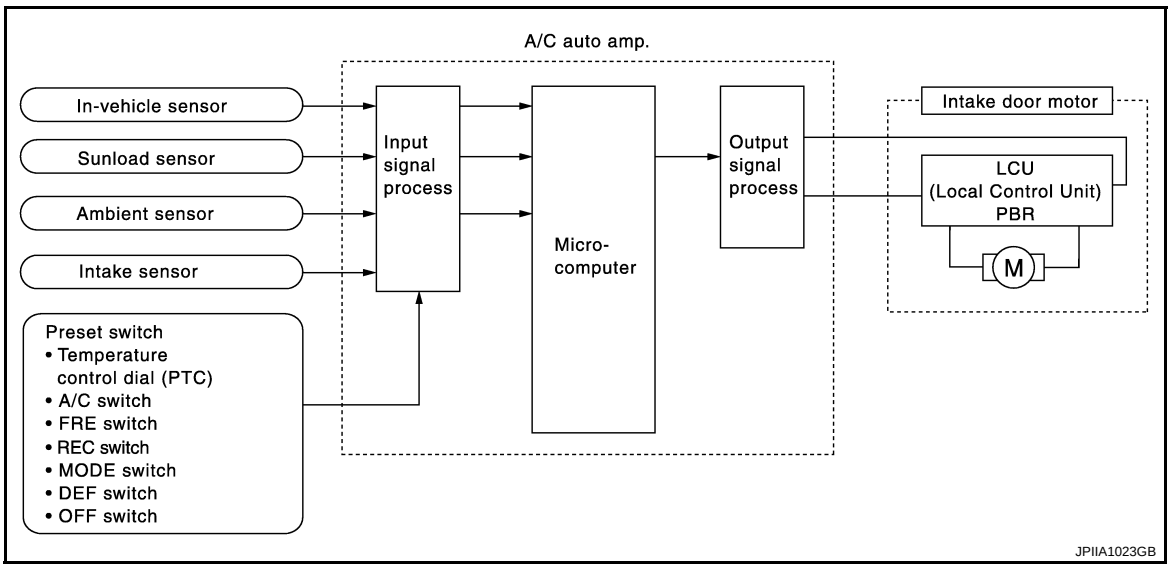

WITHOUT INTELLIGENT AIR CONDITIONER SYSTEM : System Description

INFOID:0000000003884724

The intake door is automatically controlled by the temperature setting, ambient temperature, in-vehicle temperature, intake temperature, amount of sunload and ON/OFF operation of the compressor.

SYSTEM OPERATION

The intake door control judges intake door position based on the ambient temperature, the intake air temperature and the in-vehicle temperature. When the DEF or OFF switches are pressed, the A/C auto amp. sets the intake door to the FRE position.

Door Motor Circuit

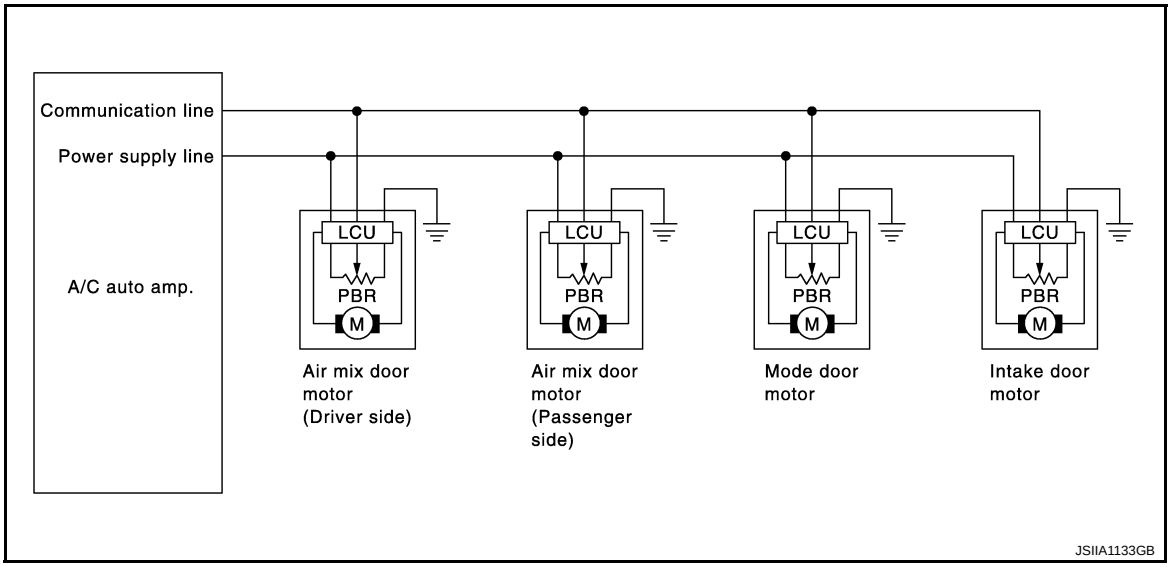

Intake Door Control Specification

- Intake door position is basically set to the FRE when the FRE indicator is ON or DEF switch is ON.
- Intake door position is basically set to the REC when the REC indicator is ON.
- The intake door automatic control selects the FRE, the 20% FRE, or the REC depending on the target air mix door opening angle, based on in-vehicle temperature, ambient temperature, and sunload.

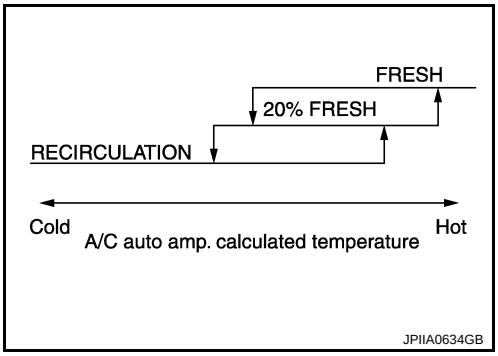

WITH INTELLIGENT AIR CONDITIONER SYSTEM

WITH INTELLIGENT AIR CONDITIONER SYSTEM : System Diagram

INFOID:0000000003884723

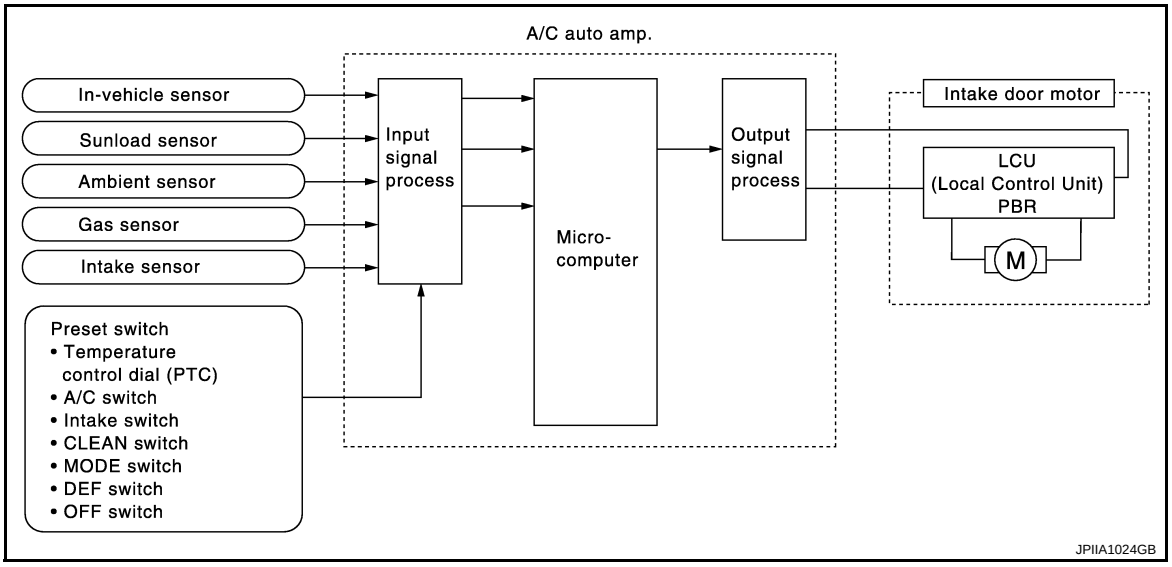

WITH INTELLIGENT AIR CONDITIONER SYSTEM : System Description

INFOID:0000000003884725

The intake door is automatically controlled by the ambient atmospheric CO and NO_2, temperature setting, ambient temperature, in-vehicle temperature, intake temperature, amount of sunload and ON/OFF operation of the compressor.

SYSTEM OPERATION

The intake door control judges intake door position based on the ambient atmospheric CO and NO_2, ambient temperature, the intake air temperature and the in-vehicle temperature. When DEF or OFF switches are pressed, the A/C auto amp. sets the intake door at the FRE position.

Door Motor Circuit

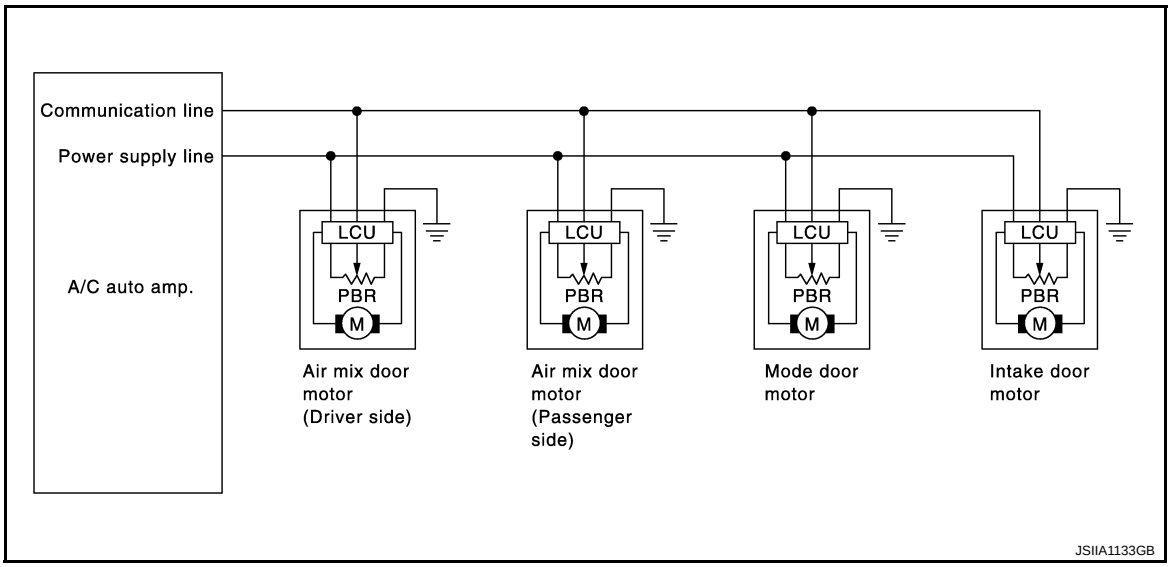

Intake Door Control Specification

- Intake door position is basically set to the FRE when the intake indicator is OFF or DEF switch is ON.
- Intake door position is basically set to the REC when the intake indicator is ON.
- The intake door automatic control selects the FRE, the 20% FRE, or the REC depending on the target air mix door opening angle, based on in-vehicle temperature, ambient temperature, and sun-load.

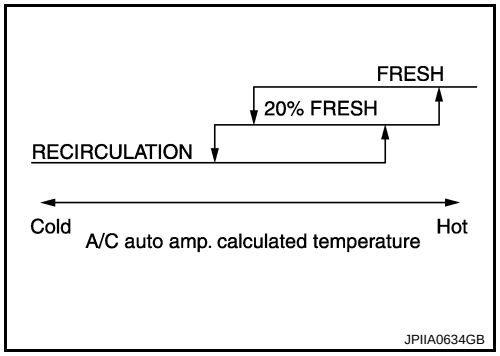

Automatic Re-circulation Control System

In addition to the regular automatic control, intake door condition is controlled by gas sensor output signal when auto recirculation mode is selected. This system automatically controls the inlet to prevent a smell of exhaust gas from getting into vehicle by receiving signals from the gas sensor that detects ambient atmospheric CO and NO_2.

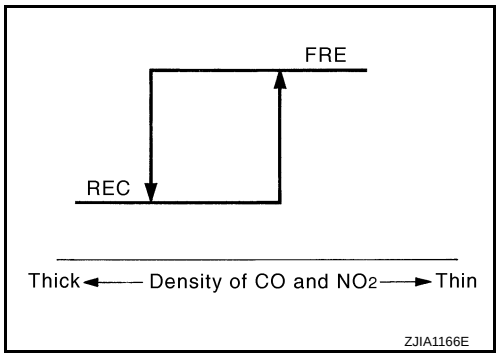

BLOWER MOTOR CONTROL SYSTEM

System Diagram

INFOID:0000000003884727

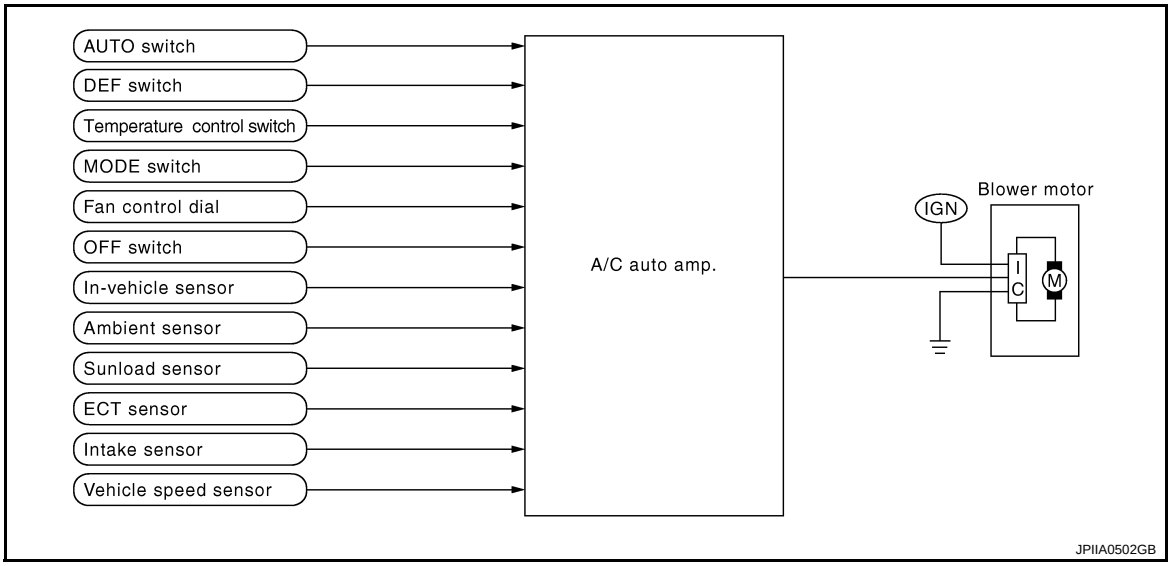

System Description

INFOID:0000000003884728

Blower speed is automatically controlled by the temperature setting, ambient temperature, in-vehicle temperature, intake temperature, amount of sunload and air mix door position.
By pressing the AUTO switch, the blower motor starts to gradually increase air flow volume.
When engine coolant temperature is low, the blower motor operation is delayed to prevent cool air from flowing.

SYSTEM OPERATION

System Operation

- For air flow, the manual selection (1-7) with the fan control dial has priority.
- If the AUTO switch is pressed or if the DEF switch is pressed while in the OFF condition, it changes to the automatic control by A/C auto amp.
- When increasing the air flow, it changes the duty ratio of the blower motor drive signal to prevent the air flow from suddenly increasing.
- There are the following types of air flow control: starting air flow control, starting air flow control at low coolant temperature, starting air flow control at high in-vehicle temperature, and air flow control at actuator operation in addition to manual control, normal automatic air flow control.

Normal Automatic Air Flow Control

- When the target temperature is set by the temperature control dial of A/C control, the A/C auto amp. performs the calculation and decides the target according to the signal from each sensor.
- The A/C auto amp. changes the duty ratio of blower motor drive signal and controls the air flow continuously so that the air flow becomes the target air flow.
- The minimum air flow will change according to the sunload when the air discharge outlet is VENT or B/L.

Fan Speed Control Specification

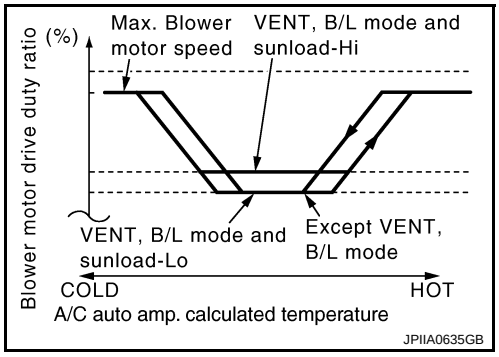

Starting Air Flow Control

- When starting the automatic control of air flow, the system gradually increases the duty ratio of the blower motor drive signal to prevent too much air from blowing.
- The time period from when the air flow changes from LO to HI is approximately 8 seconds.
- It becomes the starting air flow control at low coolant temperature according to the calculation result of the A/C auto amp. and engine coolant temperature [approximately 56°C (133°F) or less] during the automatic air flow control.
- Do not perform the starting air flow control when the air discharge outlet is set to DEF.

Starting Fan Speed Control

Start up from COLD SOAK Condition (Automatic mode)

In cold start up condition where the engine coolant temperature is below 56°C (133°F), the blower does not operate for a short period of time (up to 150 seconds). The exact start delay time varies depending on the ambient temperature and engine coolant temperature.

In the most extreme case (very low ambient temperature) the blower start delay is 150 seconds as described above. After this delay, the blower will operate at low speed until the engine coolant temperature rises above 56°C (133°F), and then the blower speed increases to the objective speed.

Start up from usual or HOT SOAK Condition (Automatic mode)

The blower will begin operation momentarily after the AUTO switch is pressed. The blower speed rises gradually to the objective speed over a time period of 3 seconds or less (actual time depends on the objective blower speed).

MAGNET CLUTCH CONTROL SYSTEM

System Diagram

INFOID:0000000003884729

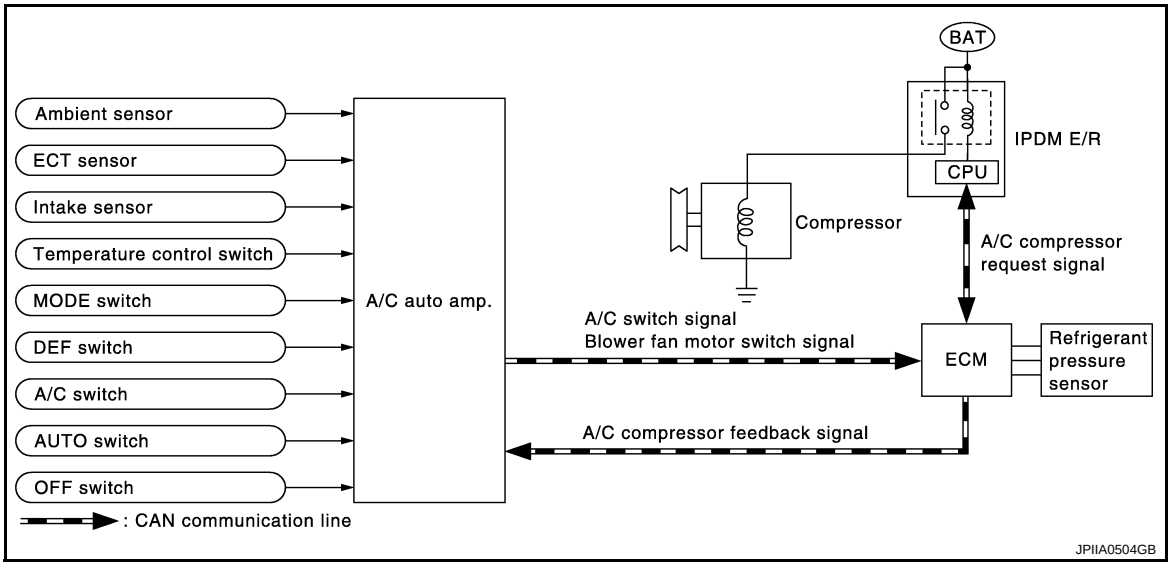

System Description

INFOID:0000000003884730

The A/C auto amp. controls compressor operation by ambient temperature, intake air temperature and signal from ECM.

SYSTEM OPERATION

When the A/C switch, the AUTO switch, or the DEF switch is pressed, A/C auto amp. transmit the A/C switch signal and blower fan motor switch signal to the ECM, via CAN communication.
ECM judges whether compressor can be turned ON, based on each sensor status (refrigerant-pressure sensor signal, throttle angle, etc.). If the ECM judges that the compressor can be turned ON, it sends A/C compressor request signal to the IPDM E/R, via CAN communication.
Upon receipt of A/C compressor request signal from the ECM, the IPDM E/R turns the A/C relay ON to operate the compressor.
When sending A/C compressor request signal to the IPDM E/R via CAN communication line, the ECM simultaneously sends A/C compressor feedback signal to A/C auto amp. via CAN communication line.
The ECM sends A/C compressor feedback signal to A/C auto amp., then, uses input A/C compressor feedback signal to control air inlet.

Compressor Protection Control

The ECM makes the A/C relay turn OFF and stops the compressor when pressure on the high-pressure side detected by the refrigerant pressure sensor is over approximately 3,119 kPa (31.19bar, 31.8 kg/cm^2, 452 psi), or below approximately 118 kPa (1.18bar, 1.2 kg/cm^2, 17 psi).

Low Temperature Protection Control

Turn the A/C relay to OFF and stop the compressor by the signal from the A/C auto amp according to the evaporator passing air temperature detected by the intake sensor and the ambient temperature detected by the ambient sensor.

CAN COMMUNICATION SYSTEM

System Description

INFOID:0000000003884731

CAN (Controller Area Network) is a serial communication line for real time application. It is an on-vehicle multiplex communication line with high data communication speed and excellent error detection ability. Many electronic control units are equipped onto each vehicle, and each control unit shares information and links with other control units during operation (not independent). In CAN communication, control units are connected with 2 communication lines (CAN-H line, CAN-L line) allowing a high rate of information transmission with less wiring. Each control unit transmits/receives data but selectively reads required data only. For details, refer to LAN-22, "CAN System Specification Chart".

DIAGNOSIS SYSTEM (HVAC)

WITHOUT INTELLIGENT AIR CONDITIONER SYSTEM

WITHOUT INTELLIGENT AIR CONDITIONER SYSTEM : CONSULT-III Function

INFOID:0000000003884732

CONSULT-III can display each diagnosis item using the diagnosis test modes shown as per the following.

CONSULT-III application items

Diagnosis mode	Description
ECU Identification	Displays the A/C auto amp. number.
Self Diagnostic Result	Displays the diagnosis results judged by A/C auto amp.
Data Monitor	Displays A/C auto amp. input/output data in real time.
Active Test	The signals used to activate each device are forcibly supplied from A/C auto amp.
Work Support	Changes the setting for each system function. • Temperature setting trimmer • Inlet port memory function (FRE) • Inlet port memory function (REC) • Foot position setting trimmer

SELF DIAGNOSTIC RESULT

Refer to HAC-212, "WITHOUT INTELLIGENT AIR CONDITIONER SYSTEM : DTC Index".

Display Item List

DTC	Items (CONSULT-III screen terms)	Diagnostic item is detected when...	Possible cause
U1000	CAN COMM CIRCUIT	When A/C auto amp. is not transmitting or receiving CAN communication signal for 2 or more seconds.	CAN communication system
U1010	CONTROL UNIT (CAN)	When detecting error during the initial diagnosis of CAN controller of A/C auto amp.	A/C auto amp.
B257B	AMB TEMP SEN (SHORT)	Detected temperature at ambient sensor –44°C (–47°F) or less	• Ambient sensor • A/C auto amp. • Harness and connector (Ambient sensor circuit is open, or there is a short in the circuit)
B257C	AMB TEMP SEN (OPEN)	Detected temperature at ambient sensor 100°C (212°F) or more	
B2578	IN CAR SENSOR (OUT OF RANGE [LOW])	Detected temperature at in-vehicle sensor –44°C (–47°F) or less	• In-vehicle sensor • A/C auto amp. • Harness and connector (In-vehicle sensor circuit is open, or there is a short in the circuit)
B2579	IN CAR SENSOR (OUT OF RANGE [HI])	Detected temperature at in-vehicle sensor 100°C (212°F) or more	
B2581	EVAP TEMP SEN (SHORT)	Detected temperature at intake sensor –33°C (–27°F) or less	• Intake sensor • A/C auto amp. • Harness and connector (Intake sensor circuit is open, or there is a short in the circuit)
B2582	EVAP TEMP SEN (OPEN)	Detected temperature at intake sensor 69°C (156°F) or more	
B2630*	SUNLOAD SEN (SHORT)	Detected calorie at sunload sensor 64.7 w/m^2 (30 kcal/m^2·h) or less	• Sunload sensor • A/C auto amp. • Harness and connector (Sunload sensor circuit is open, or there is a short in the circuit)
B2631*	SUNLOAD SEN (OPEN)	Detected calorie at sunload sensor 2832 w/m^2 (1304 kcal/m^2·h) or more	
B2632	DR AIRMIX ACTR (SHORT)	Air mix door PBR (driver side) position 5% or less	• Air mix door motor (driver side) • A/C auto amp. • Harness and connector (CAN communication line is open or shorted) (Air mix door motor is open or shorted)
B2633	DR AIRMIX ACTR (OPEN)	Air mix door PBR (driver side) position 95% or more	

DTC	Items (CONSULT-III screen terms)	Diagnostic item is detected when...	Possible cause
B2634	PASS AIRMIX ACTR (SHORT)	Air mix door PBR (passenger side) position 5% or less	• Air mix door motor (passenger side) • A/C auto amp. • Harness and connector (CAN communication line is open or shorted) (Air mix door motor is open or shorted)
B2635	PASS AIRMIX ACTR (OPEN)	Air mix door PBR (passenger side) position 95% or more	
B2636	DR VENT DOOR FAIL	When the malfunctioning door position is detected at VENT position	• Mode door motor • A/C auto amp. • Harness and connector (CAN communication line is open or shorted) (Mode door motor is open or shorted)
B2637	DR B/L DOOR FAIL	When the malfunctioning door position is detected at B/L position	
B2638	DR D/F1 DOOR FAIL	When the malfunctioning door position is detected at FOOT position	
B2639	DR DEF DOOR FAIL	When the malfunctioning door position is detected at DEF position	
B263D	FRE DOOR FAIL	When the malfunctioning intake door position is detected at FRE position	• Intake door motor • A/C auto amp. • Harness and connector (CAN communication line is open or shorted) (Intake door motor is open or shorted)
B263E	20P FRE DOOR FAIL	When the malfunctioning intake door position is detected at 20%FRE position	
B263F	REC DOOR FAIL	When the malfunctioning intake door position is detected at REC position	
B2654	D/F2 DOOR FAIL	When the malfunctioning door position is detected at D/F position	• Mode door motor • A/C auto amp. • Harness and connector (CAN communication line is open or shorted) (Mode door motor is open or shorted)
B2655	B/L2 DOOR FAIL	When the malfunctioning door position is detected at B/L2 position	
B2656	BTC FRE DOOR FAIL	When the malfunctioning intake door position is detected	• Intake door motor • A/C auto amp. • Harness and connector (CAN communication line is open or shorted) (Intake door motor is open or shorted)

*: Perform self-diagnosis under sunshine. When performing indoors, aim a light (more than 60 W) at sunload sensor, otherwise self-diagnosis indicates even though the sunload sensor is functioning normally.

DATA MONITOR

Display item list

Monitor item [Unit]		Description
COMP REQ SIG	[On/Off]	Displays A/C switch ON/OFF status transmitted to other units via CAN communication
FAN REQ SIG	[On/Off]	Displays blower switch ON/OFF status transmitted to other units via CAN communication
AMB TEMP SEN	[°C]	Ambient sensor value converted from ambient sensor signal received from ambient sensor
IN-VEH TEMP	[°C]	In-vehicle sensor value converted from in-vehicle sensor signal received from in-vehicle sensor
INT TEMP SEN	[°C]	Intake sensor value converted from intake sensor signal received from intake sensor
SUNLOAD SEN	[w/m^2]	Sunload sensor value converted from sunload sensor signal received from sunload sensor
AMB SEN CAL	[°C]	Ambient sensor value calculated by A/C auto amp.
IN-VEH CAL	[°C]	In-vehicle sensor value calculated by A/C auto amp.

Monitor item [Unit]		Description
INT TEMP CAL	[°C]	Intake sensor value calculated by A/C auto amp.
SUNL SEN CAL	[w/m^2]	Sunload sensor value calculated by A/C auto amp.
FAN DUTY	[%]	Duty ratio of blower motor judged by A/C auto amp.
XM		Target discharge air temperature judged by A/C auto amp. according to the temperature setting and the value from each sensor
ENG COOL TEMP	[°C]	Water temperature signal value received from ECM via CAN communication
VEHICLE SPEED	[Mph (km/h)]	Vehicle speed signal value received from meter via CAN communication

ACTIVE TEST

Test item	Description
ALL SEG	**NOTE:** • Item can be displayed but cannot be tested. • When choosing to turn “ALL SEG” on, error message is displayed but it is not malfunction.
HVAC TEST	The operation check of A/C system can be performed by selecting the mode. Refer to the following table for the conditions of each mode.

HVAC TEST

	Test item						
	MODE 1	MODE 2	MODE 3	MODE 4	MODE 5	MODE 6	MODE 7
Mode door position	VENT	B/L1	B/L2	AUTO FOOT	D/F	DEF	-
Intake door position	REC	REC	20% FRE	FRE	FRE	FRE	-
Air mix door position (driver & passenger side)	FULL COLD	FULL COLD	FULL HOT	FULL HOT	FULL HOT	FULL HOT	-
Blower motor duty ratio	37%	91%	65%	65%	65%	91%	-
Compressor (Magnet clutch)	ON	ON	OFF	OFF	ON	ON	-

NOTE:
- Perform the inspection of each output device after starting the engine because the compressor is operated.
- When choosing to “MODE 7”, error message is displayed but it is not malfunction.

WORK SUPPORT

Work item	Description	Reference
TEMP SET CORRECT	If the temperature felt by the customer is different than the air flow temperature controlled by the temperature setting, the auto amplifier control temperature can be adjusted to compensate for the temperature setting.	HAC-110, "WITHOUT INTELLIGENT AIR CONDITIONER SYSTEM : Temperature Setting Trimmer"
BLOW SET	In the FOOT mode, the air blowing to the DEF can change ON/OFF.	HAC-110, "WITHOUT INTELLIGENT AIR CONDITIONER SYSTEM : Foot Position Setting Trimmer"

Work item	Description	Reference
FRE MEMORY SET	• If the ignition switch is turned to the OFF position while the FRE switch is set to ON (fresh air intake), “Perform the memory” or “Do not perform the memory” of the FRE switch ON (fresh air intake) condition can be selected. • If “Perform the memory” was set, the FRE switch will be ON (fresh air intake) when turning the ignition switch to the ON position again. • If “Do not perform the memory” was set, the air inlets will be controlled automatically when turning the ignition switch to the ON position again.	HAC-111, "WITHOUT INTELLIGENT AIR CONDITIONER SYSTEM : Inlet Port Memory Function (FRE)"
REC MEMORY SET	• If the ignition switch is turned to the OFF position while the REC switch is set to ON (recirculation), “Perform the memory” or “Do not perform the memory” of the REC switch ON (recirculation) condition can be selected. • If “Perform the memory” was set, the REC switch will be ON (recirculation) when turning the ignition switch to the ON position again. • If “Do not perform the memory” was set, the air inlets will be controlled automatically when turning the ignition switch to the ON position again.	HAC-111, "WITHOUT INTELLIGENT AIR CONDITIONER SYSTEM : Inlet Port Memory Function (REC)"

NOTE:
When the battery cable is disconnected from the negative terminal or when the battery voltage becomes 10 V or less, the setting of WORK SUPPORT may be cancelled.

WITH INTELLIGENT AIR CONDITIONER SYSTEM

WITH INTELLIGENT AIR CONDITIONER SYSTEM : CONSULT-III Function

INFOID:0000000003884733

CONSULT-III can display each diagnosis item using the diagnosis test modes shown as per the following.

CONSULT-III application items

Diagnosis mode	Description
ECU Identification	Displays the A/C auto amp. number.
Self Diagnostic Result	Displays the diagnosis results judged by A/C auto amp.
Data Monitor	Displays A/C auto amp. input/output data in real time.
Active Test	The signals used to activate each device are forcibly supplied from A/C auto amp.
Work Support	Changes the setting for each system function. • Temperature setting trimmer • Inlet port memory function (FRE) • Inlet port memory function (REC) • Foot position setting trimmer • Gas sensor sensitivity adjustment function • Clean switch interlocking movement change function

SELF DIAGNOSTIC RESULT

Refer to HAC-224, "WITH INTELLIGENT AIR CONDITIONER SYSTEM : DTC Index".

Display Item List

DTC	Items (CONSULT-III screen terms)	Diagnostic item is detected when...	Possible cause
U1000	CAN COMM CIRCUIT	When A/C auto amp. is not transmitting or receiving CAN communication signal for 2 or more seconds.	CAN communication system
U1010	CONTROL UNIT (CAN)	When detecting error during the initial diagnosis of CAN controller of A/C auto amp.	A/C auto amp.

DTC	Items (CONSULT-III screen terms)	Diagnostic item is detected when...	Possible cause
B257B	AMB TEMP SEN (SHORT)	Detected temperature at ambient sensor –44°C (–47°F) or less	• Ambient sensor • A/C auto amp. • Harness and connector (Ambient sensor circuit is open, or there is a short in the circuit)
B257C	AMB TEMP SEN (OPEN)	Detected temperature at ambient sensor 100°C (212°F) or more	
B2578	IN CAR SENSOR (OUT OF RANGE [LOW])	Detected temperature at in-vehicle sensor –44°C (–47°F) or less	• In-vehicle sensor • A/C auto amp. • Harness and connector (In-vehicle sensor circuit is open, or there is a short in the circuit)
B2579	IN CAR SENSOR (OUT OF RANGE [HI])	Detected temperature at in-vehicle sensor 100°C (212°F) or more	
B2581	EVAP TEMP SEN (SHORT)	Detected temperature at intake sensor –33°C (–27°F) or less	• Intake sensor • A/C auto amp. • Harness and connector (Intake sensor circuit is open, or there is a short in the circuit)
B2582	EVAP TEMP SEN (OPEN)	Detected temperature at intake sensor 69°C (156°F) or more	
B262A	GAS SENSOR (SHORT)	Gas sensor duty 10% or less	• Gas sensor • A/C auto amp. • Harness and connector (Gas sensor circuit is open, or there is a short in the circuit)
B262B	GAS SENSOR (OPEN)	Gas sensor duty 90% or more	
B2630*	SUNLOAD SEN (SHORT)	Detected calorie at sunload sensor 64.7 w/m^2 (30 kcal/m^2·h) or less	• Sunload sensor • A/C auto amp. • Harness and connector (Sunload sensor circuit is open, or there is a short in the circuit)
B2631*	SUNLOAD SEN (OPEN)	Detected calorie at sunload sensor 2832 w/m^2 (1304 kcal/m^2·h) or more	
B2632	DR AIRMIX ACTR (SHORT)	Air mix door PBR (driver side) position 5% or less	• Air mix door motor (driver side) • A/C auto amp. • Harness and connector (CAN communication line is open or shorted) (Air mix door motor is open or shorted)
B2633	DR AIRMIX ACTR (OPEN)	Air mix door PBR (driver side) position 95% or more	
B2634	PASS AIRMIX ACTR (SHORT)	Air mix door PBR (passenger side) position 5% or less	• Air mix door motor (passenger side) • A/C auto amp. • Harness and connector (CAN communication line is open or shorted) (Air mix door motor is open or shorted)
B2635	PASS AIRMIX ACTR (OPEN)	Air mix door PBR (passenger side) position 95% or more	
B2636	DR VENT DOOR FAIL	When the malfunctioning door position is detected at VENT position	• Mode door motor • A/C auto amp. • Harness and connector (CAN communication line is open or shorted) (Mode door motor is open or shorted)
B2637	DR B/L DOOR FAIL	When the malfunctioning door position is detected at B/L position	
B2638	DR D/F1 DOOR FAIL	When the malfunctioning door position is detected at FOOT position	
B2639	DR DEF DOOR FAIL	When the malfunctioning door position is detected at DEF position	
B263D	FRE DOOR FAIL	When the malfunctioning intake door position is detected at FRE position	• Intake door motor • A/C auto amp. • Harness and connector (CAN communication line is open or shorted) (Intake door motor is open or shorted)
B263E	20P FRE DOOR FAIL	When the malfunctioning intake door position is detected at 20%FRE position	
B263F	REC DOOR FAIL	When the malfunctioning intake door position is detected at REC position	

DTC	Items (CONSULT-III screen terms)	Diagnostic item is detected when...	Possible cause
B2654	D/F2 DOOR FAIL	When the malfunctioning door position is detected at D/F position	• Mode door motor • A/C auto amp. • Harness and connector (CAN communication line is open or shorted) (Mode door motor is open or shorted)
B2655	B/L2 DOOR FAIL	When the malfunctioning door position is detected at B/L2 position	
B2656	BTC FRE DOOR FAIL	When the malfunctioning intake door position is detected	• Intake door motor • A/C auto amp. • Harness and connector (CAN communication line is open or shorted) (Intake door motor is open or shorted)
B2657	GAS SENSOR CIRCUIT (SHORT)	Gas sensor duty 0%	• Gas sensor • A/C auto amp. • Harness and connector (Gas sensor circuit is open, or there is a short in the circuit)
B2658	GAS SENSOR CIRCUIT (OPEN)	Gas sensor duty 100%	

*: Perform self-diagnosis under sunshine. When performing indoors, aim a light (more than 60 W) at sunload sensor, otherwise self-diagnosis indicates even though the sunload sensor is functioning normally.

DATA MONITOR

Display item list

Monitor item [Unit]		Description
COMP REQ SIG	[On/Off]	Displays A/C switch ON/OFF status transmitted to other units via CAN communication
FAN REQ SIG	[On/Off]	Displays blower switch ON/OFF status transmitted to other units via CAN communication
AMB TEMP SEN	[°C]	Ambient sensor value converted from ambient sensor signal received from ambient sensor
IN-VEH TEMP	[°C]	In-vehicle sensor value converted from in-vehicle sensor signal received from in-vehicle sensor
INT TEMP SEN	[°C]	Intake sensor value converted from intake sensor signal received from intake sensor
SUNLOAD SEN	[w/m^2]	Sunload sensor value converted from sunload sensor signal received from sunload sensor
AMB SEN CAL	[°C]	Ambient sensor value calculated by A/C auto amp.
IN-VEH CAL	[°C]	In-vehicle sensor value calculated by A/C auto amp.
INT TEMP CAL	[°C]	Intake sensor value calculated by A/C auto amp.
SUNL SEN CAL	[w/m^2]	Sunload sensor value calculated by A/C auto amp.
FAN DUTY	[%]	Duty ratio of blower motor judged by A/C auto amp.
XM		Target discharge air temperature judged by A/C auto amp. according to the temperature setting and the value from each sensor
ENG COOL TEMP	[°C]	Water temperature signal value received from ECM via CAN communication
VEHICLE SPEED	[Mph (km/h)]	Vehicle speed signal value received from meter via CAN communication

ACTIVE TEST

Test item	Description
ALL SEG	**NOTE:** • Item can be displayed but cannot be tested. • When choosing to turn “ALL SEG” on, error message is displayed but it is not malfunction.
HVAC TEST	The operation check of A/C system can be performed by selecting the mode. Refer to the following table for the conditions of each mode.

HVAC TEST

	Test item						
	MODE 1	MODE 2	MODE 3	MODE 4	MODE 5	MODE 6	MODE 7
Mode door position	VENT	B/L1	B/L2	AUTO FOOT	D/F	DEF	-
Intake door position	REC	REC	20% FRE	FRE	FRE	FRE	-
Air mix door position (driver & passenger side)	FULL COLD	FULL COLD	FULL HOT	FULL HOT	FULL HOT	FULL HOT	-
Blower motor duty ratio	37%	91%	65%	65%	65%	91%	-
Compressor (Magnet clutch)	ON	ON	OFF	OFF	ON	ON	-
Ionizer	ON	ON	ON	ON	ON	OFF	-
Ion mode	ION	ION	CLEAN	CLEAN	ION	-	-

NOTE:
- Perform the inspection of each output device after starting the engine because the compressor is operated.
- When choosing to “MODE 7”, error message is displayed but it is not malfunction.

WORK SUPPORT

Work item	Description	Reference
TEMP SET CORRECT	If the temperature felt by the customer is different than the air flow temperature controlled by the temperature setting, the auto amplifier control temperature can be adjusted to compensate for the temperature setting.	HAC-114, "WITH INTELLIGENT AIR CONDITIONER SYSTEM : Temperature Setting Trimmer"
BLOW SET	In the FOOT mode, the air blowing to the DEF can change ON/OFF.	HAC-114, "WITH INTELLIGENT AIR CONDITIONER SYSTEM : Foot Position Setting Trimmer"
FRE MEMORY SET	• If the ignition switch is turned to the OFF position while the FRE switch is set to ON (fresh air intake), “Perform the memory” or “Do not perform the memory” of the FRE switch ON (fresh air intake) condition can be selected. • If “Perform the memory” was set, the FRE switch will be ON (fresh air intake) when turning the ignition switch to the ON position again. • If “Do not perform the memory” was set, the air inlets will be controlled automatically when turning the ignition switch to the ON position again.	HAC-115, "WITH INTELLIGENT AIR CONDITIONER SYSTEM : Inlet Port Memory Function (FRE)"
REC MEMORY SET	• If the ignition switch is turned to the OFF position while the REC switch is set to ON (recirculation), “Perform the memory” or “Do not perform the memory” of the REC switch ON (recirculation) condition can be selected. • If “Perform the memory” was set, the REC switch will be ON (recirculation) when turning the ignition switch to the ON position again. • If “Do not perform the memory” was set, the air inlets will be controlled automatically when turning the ignition switch to the ON position again.	HAC-115, "WITH INTELLIGENT AIR CONDITIONER SYSTEM : Inlet Port Memory Function (REC)"

Work item	Description	Reference
GAS SENSOR SENSITIVITY ADJUSTMENT FUNCTION	Gas sensor sensitivity can be changed when smell of exhaust gas introduced in the automatic re-circulation control differs from customer's sensible smell.	HAC-116, "WITH INTELLIGENT AIR CONDITIONER SYSTEM : Gas Sensor Sensitivity Adjustment Function (With Intelligent Air Conditioner System)"
CLEAN SWITCH INTERLOCKING MOVEMENT CHANGE FUNCTION	Operation of the clean switch, which activates the automatic re-circulation control system, can be set to become available when the A/C switch is OFF. In addition, when the clean switch is ON, it can be set that the A/C switch is not turned ON in synchronization with the clean switch.	HAC-116, "WITH INTELLIGENT AIR CONDITIONER SYSTEM : Clean Switch Interlocking Movement Change Function (With Intelligent Air Conditioner System)"

NOTE:
When the battery cable is disconnected from the negative terminal or when the battery voltage becomes 10 V or less, the setting of WORK SUPPORT may be cancelled.

COMPONENT DIAGNOSIS

U1000 CAN COMM CIRCUIT

Description

INFOID:0000000003884734

CAN (Controller Area Network) is a serial communication line for real time application. It is an on-vehicle multiplex communication line with high data communication speed and excellent error detection ability. Many electronic control units are equipped onto a vehicle, and each control unit shares information and links with other control units during operation (not independent). In CAN communication, control units are connected with two communication lines (CAN-H line, CAN-L line) allowing a high rate of information transmission with less wiring. Each control unit transmits/receives data but selectively reads required data only.
CAN Communication Signal Chart. Refer to LAN-13, "How to Use CAN Communication Signal Chart".

DTC Logic

INFOID:0000000003884735

DTC DETECTION LOGIC

DTC	Items (CONSULT-III screen terms)	Diagnostic item is detected when...	Possible cause
U1000	CAN COMM CIRCUIT	When A/C auto amp. is not transmitting or receiving CAN communication signal for 2 or more seconds.	CAN communication system

Diagnosis Procedure

INFOID:0000000003884736

1. CHECK WITH SELF-DIAGNOSIS FUNCTION OF CONSULT-III

1. Turn ignition switch ON and wait for 2 or more seconds.
2. Using CONSULT-III, perform “SELF-DIAGNOSIS RESULTS” of HVAC.

Is “CAN COMM CIRCUIT” displayed?

YES >> Perform trouble diagnosis for the CAN communication system. Refer to LAN-14, "Trouble Diagnosis Flow Chart".
NO >> Perform the intermittent malfunction diagnosis. Refer to GI-35, "Intermittent Incident".

U1010 CONTROL UNIT (CAN)

Description

INFOID:0000000003884737

Initial diagnosis of A/C auto amp.

DTC Logic

INFOID:0000000003884738

DTC DETECTION LOGIC

DTC	Items (CONSULT-III screen terms)	Diagnostic item is detected when...	Possible cause
U1010	CONTROL UNIT (CAN)	When detecting error during the initial diagnosis of CAN controller of A/C auto amp.	A/C auto amp.

Diagnosis Procedure

INFOID:0000000003884739

1. CHECK WITH SELF-DIAGNOSIS FUNCTION OF CONSULT-III

Using CONSULT-III, perform “SELF-DIAGNOSIS RESULTS” of HVAC.

Is DTC “U1010” displayed?

YES >> Replace A/C auto amp.
NO >> INSPECTION END

B257B, B257C AMBIENT SENSOR

Description

INFOID:0000000003884740

COMPONENT DESCRIPTION

Ambient Sensor

- The ambient sensor (1) is installed behind left side of front bumper.
- It detects ambient temperature and converts it into a resistance value which is then input into the A/C auto amp.

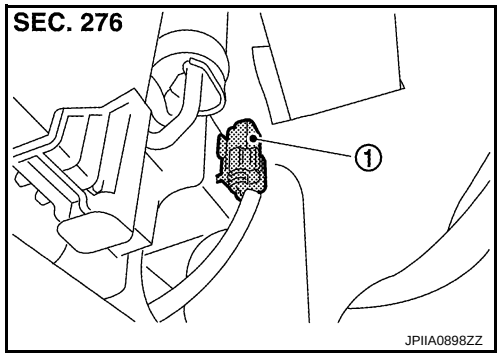

Ambient Sensor Circuit

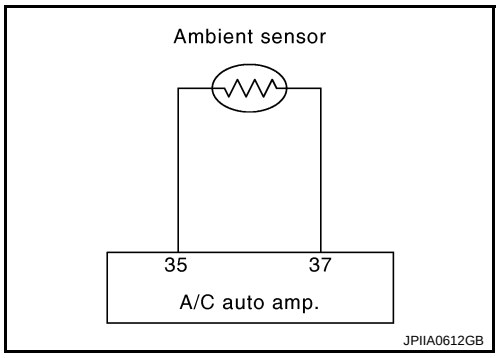

AMBIENT TEMPERATURE INPUT PROCESS

The A/C auto amp. equips a processing circuit for the ambient sensor input. However, when the temperature detected by the ambient sensor increases quickly, the processing circuit retards the A/C auto amp. function. It only allows the A/C auto amp. to recognize an ambient temperature increase of 0.33°C (0.6°F) per 100 seconds.

As an example, consider stopping for a few minutes after high speed driving. Although the actual ambient temperature has not changed, the temperature detected by the ambient sensor increases. This is because the heat from the engine compartment can radiate to the front bumper area, the location of the ambient sensor.

DTC Logic

INFOID:0000000003884741

DTC DETECTION LOGIC

NOTE:

- If DTC is displayed along with DTC U1000 or U1010, first diagnose the DTC U1000 or U1010. Refer to HAC-164, "DTC Logic" or HAC-165, "DTC Logic".
- If there is an open circuit in the ambient sensor, A/C auto amp. registers extreme cold [–44°C (–47°F)] and adjusts the temperature control warmer.

DTC	Items (CONSULT-III screen terms)	Diagnostic item is detected when...	Possible cause
B257B	AMB TEMP SEN (SHORT)	Detected temperature at ambient sensor –44°C (–47°F) or less	• Ambient sensor • A/C auto amp. • Harness and connector (Ambient sensor circuit is open, or there is a short in the circuit)
B257C	AMB TEMP SEN (OPEN)	Detected temperature at ambient sensor 100°C (212°F) or more	

DTC CONFIRMATION PROCEDURE

1. CHECK WITH SELF-DIAGNOSIS FUNCTION OF CONSULT-III

1. Using CONSULT-III, perform “SELF-DIAGNOSIS RESULTS” of HVAC.
2. Check if any DTC is displayed in the self-diagnosis results.

NOTE:

- If DTC is displayed along with DTC U1000 or U1010, first diagnose the DTC U1000 or U1010. Refer to HAC-164, "DTC Logic" or HAC-165, "DTC Logic".
- If there is an open circuit in the ambient sensor, A/C auto amp. registers extreme cold [–44°C (–47°F)] and adjusts the temperature control warmer.

Is DTC “B257B” or “B257C” displayed?

YES >> Perform trouble diagnosis for the ambient sensor. Refer to HAC-167, "Diagnosis Procedure".
NO >> INSPECTION END

Diagnosis Procedure

INFOID:0000000003884742

1. CHECK VOLTAGE BETWEEN AMBIENT SENSOR AND GROUND

1. Disconnect ambient sensor connector.
2. Turn ignition switch ON.
3. Check voltage between ambient sensor harness connector and ground.

(+)		(–)	Voltage
Ambient sensor		—	
Connector	Terminal		
E337	1	Ground	Approx. 5 V

Is the inspection result normal?

YES >> GO TO 2.
NO >> GO TO 4.

2. CHECK CIRCUIT CONTINUITY BETWEEN AMBIENT SENSOR AND A/C AUTO AMP.

1. Turn ignition switch OFF.
2. Disconnect A/C auto amp. connector.
3. Check continuity between ambient sensor harness connector and A/C auto amp. harness connector.

Ambient sensor		A/C auto amp.		Continuity
Connector	Terminal	Connector	Terminal	
E337	2	M50	37	Existed

Is the inspection result normal?

YES >> GO TO 3.
NO >> Repair harness or connector.

3. CHECK AMBIENT SENSOR

Check ambient sensor. Refer to HAC-168, "Component Inspection".

Is the inspection result normal?

YES >> Replace A/C auto amp.
NO >> Replace ambient sensor.

4. CHECK CIRCUIT CONTINUITY BETWEEN AMBIENT SENSOR AND A/C AUTO AMP.

1. Turn ignition switch OFF.
2. Disconnect A/C auto amp. connector.
3. Check continuity between ambient sensor harness connector and A/C auto amp. harness connector.

Ambient sensor		A/C auto amp.		Continuity
Connector	Terminal	Connector	Terminal	
E337	1	M50	35	Existed

4. Check continuity between ambient sensor harness connector and ground.

Ambient sensor		—	Continuity
Connector	Terminal		
E337	1	Ground	Not existed

Is the inspection result normal?

YES >> Replace A/C auto amp.
NO >> Repair harness or connector.

Component Inspection

INFOID:0000000003884743

1. CHECK AMBIENT SENSOR

1. Turn ignition switch OFF.
2. Disconnect ambient sensor connector. Refer to VTL-81, "Exploded View".
3. Check resistance between ambient sensor terminals.

Terminal		Condition	Resistance kΩ
		Temperature °C (°F)	
1	2	–15 (5)	12.73
		–10 (14)	9.92
		–5 (23)	7.80
		0 (32)	6.19
		5 (41)	4.95
		10 (50)	3.99
		15 (59)	3.24
		20 (68)	2.65
		25 (77)	2.19
		30 (86)	1.81
		35 (95)	1.51
		40 (104)	1.27
		45 (113)	1.07

Is the inspection result normal?

YES >> END.
NO >> Replace ambient sensor.

B2578, B2579 IN-VEHICLE SENSOR

Description

INFOID:0000000003884744

In-vehicle Sensor

- The in-vehicle sensor (1) is located on instrument driver lower panel.
- It converts variations in compartment air temperature drawn from the aspirator into a resistance value. It is then input into the A/C auto amp.

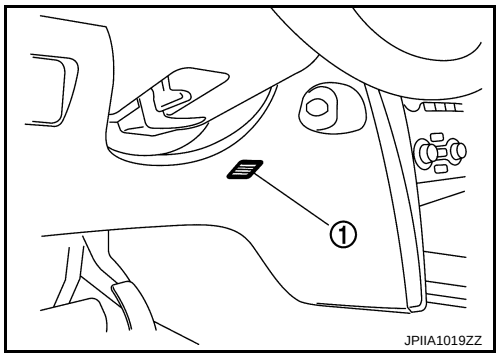

In-vehicle Sensor Circuit

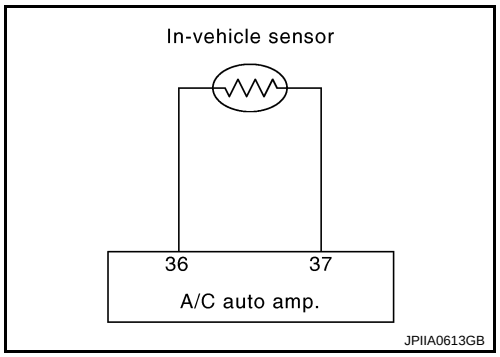

Aspirator

The aspirator (1) is located on driver side of heater & cooling unit assembly. It produces vacuum pressure due to air discharged from the heater & cooling unit assembly, continuously taking compartment air in the aspirator.

⇦: Vehicle front

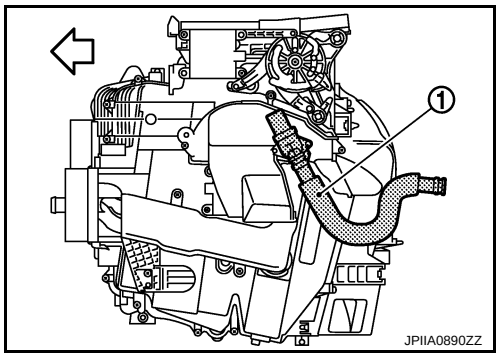

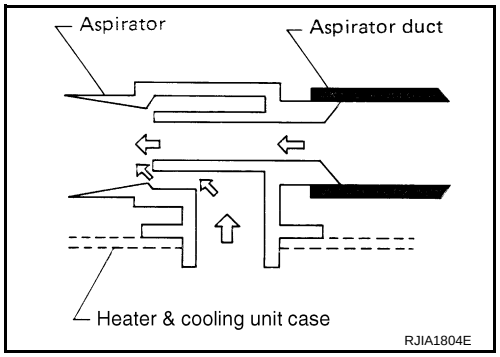

DTC Logic

INFOID:0000000003884745

DTC DETECTION LOGIC

NOTE:

If DTC is displayed along with DTC U1000 or U1010, first diagnose the DTC U1000 or U1010. Refer to HAC-164, "DTC Logic" or HAC-165, "DTC Logic".

DTC	Items (CONSULT-III screen terms)	Diagnostic item is detected when...	Possible cause
B2578	IN CAR SENSOR (OUT OF RANGE [LOW])	Detected temperature at in-vehicle sensor –44°C (–47°F) or less	• In-vehicle sensor • A/C auto amp. • Harness and connector (In-vehicle sensor circuit is open, or there is a short in the circuit)
B2579	IN CAR SENSOR (OUT OF RANGE [HI])	Detected temperature at in-vehicle sensor 100°C (212°F) or more	

DTC CONFIRMATION PROCEDURE

1. CHECK WITH SELF-DIAGNOSIS FUNCTION OF CONSULT-III

1. Using CONSULT-III, perform “SELF-DIAGNOSIS RESULTS” of HVAC.
2. Check if any DTC is displayed in the self-diagnosis results.

NOTE:
If DTC is displayed along with DTC U1000 or U1010, first diagnose the DTC U1000 or U1010. Refer to HAC-164, "DTC Logic" or HAC-165, "DTC Logic".

Is DTC “B2578” or “B2579” displayed?

YES >> Perform trouble diagnosis for the in-vehicle sensor. Refer to HAC-170, "Diagnosis Procedure".
NO >> INSPECTION END

Diagnosis Procedure

INFOID:0000000003884746

1. CHECK VOLTAGE BETWEEN IN-VEHICLE SENSOR AND GROUND

1. Disconnect in-vehicle sensor connector.
2. Turn ignition switch ON.
3. Check voltage between in-vehicle sensor harness connector and ground.

(+)		(–)	Voltage
In-vehicle sensor		—	
Connector	Terminal		
M41	1	Ground	Approx. 5 V

Is the inspection result normal?

YES >> GO TO 2.
NO >> GO TO 4.

2. CHECK CIRCUIT CONTINUITY BETWEEN IN-VEHICLE SENSOR AND A/C AUTO AMP.

1. Turn ignition switch OFF.
2. Disconnect A/C auto amp. connector.
3. Check continuity between in-vehicle sensor harness connector and A/C auto amp. harness connector.

In-vehicle sensor		A/C auto amp.		Continuity
Connector	Terminal	Connector	Terminal	
M41	2	M50	37	Existed

Is the inspection result normal?

YES >> GO TO 3.
NO >> Repair harness or connector.

3. CHECK IN-VEHICLE SENSOR

Check in-vehicle sensor. Refer to HAC-171, "Component Inspection".

Is the inspection result normal?

YES >> Replace A/C auto amp.
NO >> Replace in-vehicle sensor.

4. CHECK CIRCUIT CONTINUITY BETWEEN IN-VEHICLE SENSOR AND A/C AUTO AMP.

1. Turn ignition switch OFF.
2. Disconnect A/C auto amp. connector.
3. Check continuity between in-vehicle sensor harness connector and A/C auto amp. harness connector.

In-vehicle sensor		A/C auto amp.		Continuity
Connector	Terminal	Connector	Terminal	
M41	1	M50	36	Existed

4. Check continuity between in-vehicle sensor harness connector and ground.

In-vehicle sensor		—	Continuity
Connector	Terminal		
M41	1	Ground	Not existed

Is the inspection result normal?

YES >> Replace A/C auto amp.
NO >> Repair harness or connector.

Component Inspection

INFOID:0000000003884747

1. CHECK IN-VEHICLE SENSOR

1. Turn ignition switch OFF.
2. Disconnect in-vehicle sensor connector. Refer to VTL-83, "Exploded View".
3. Check resistance between in-vehicle sensor terminals.

Terminal		Condition	Resistance kΩ
		Temperature °C (°F)	
1	2	–15 (5)	12.73
		–10 (14)	9.92
		–5 (23)	7.80
		0 (32)	6.19
		5 (41)	4.95
		10 (50)	3.99
		15 (59)	3.24
		20 (68)	2.65
		25 (77)	2.19
		30 (86)	1.81
		35 (95)	1.51
		40 (104)	1.27
		45 (113)	1.07

Is the inspection result normal?

YES >> END.
NO >> Replace in-vehicle sensor.

B2581, B2582 INTAKE SENSOR

Description

INFOID:0000000003884748

Intake Sensor
- The intake sensor (2) is located on the evaporator (1).
- It converts air temperature after it passes through the evaporator into a resistance value which is then input to the A/C auto amp.

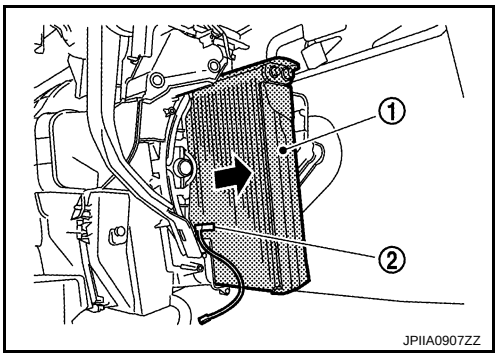

Intake Sensor Circuit

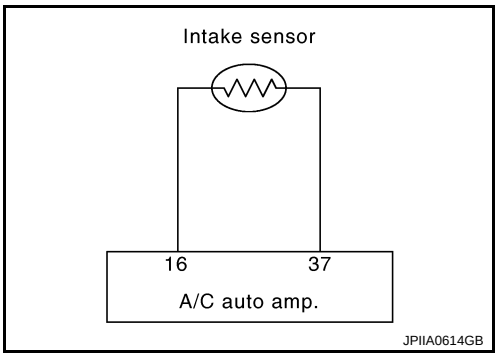

DTC Logic

INFOID:0000000003884749

DTC DETECTION LOGIC

NOTE:
If DTC is displayed along with DTC U1000 or U1010, first diagnose the DTC U1000 or U1010. Refer to HAC-164, "DTC Logic" or HAC-165, "DTC Logic".

DTC	Items (CONSULT-III screen terms)	Diagnostic item is detected when...	Possible cause
B2581	EVAP TEMP SEN (SHORT)	Detected temperature at intake sensor –33°C (–27°F) or less	• Intake sensor • A/C auto amp. • Harness and connector (Intake sensor circuit is open, or there is a short in the circuit)
B2582	EVAP TEMP SEN (OPEN)	Detected temperature at intake sensor 69°C (156°F) or more	

DTC CONFIRMATION PROCEDURE

1. CHECK WITH SELF-DIAGNOSIS FUNCTION OF CONSULT-III

1. Using CONSULT-III, perform “SELF-DIAGNOSIS RESULTS” of HVAC.
2. Check if any DTC is displayed in the self-diagnosis results.

NOTE:
If DTC is displayed along with DTC U1000 or U1010, first diagnose the DTC U1000 or U1010. Refer to HAC-164, "DTC Logic" or HAC-165, "DTC Logic".

Is DTC “B2581” or “B2582” displayed?

YES >> Perform trouble diagnosis for the intake sensor. Refer to HAC-172, "Diagnosis Procedure".
NO >> INSPECTION END

Diagnosis Procedure

INFOID:0000000003884750

1. CHECK VOLTAGE BETWEEN INTAKE SENSOR AND GROUND

1. Disconnect intake sensor connector.
2. Turn ignition switch ON.
3. Check voltage between intake sensor harness connector and ground.

(+)		(–)	Voltage
Intake sensor		—	
Connector	Terminal		
M42	2	Ground	Approx. 5 V

Is the inspection result normal?

YES >> GO TO 2.
NO >> GO TO 4.

2. CHECK CIRCUIT CONTINUITY BETWEEN INTAKE SENSOR AND A/C AUTO AMP.

1. Turn ignition switch OFF.
2. Disconnect A/C auto amp. connector.
3. Check continuity between intake sensor harness connector and A/C auto amp. harness connector.

Intake sensor		A/C auto amp.		Continuity
Connector	Terminal	Connector	Terminal	
M42	1	M50	37	Existed

Is the inspection result normal?

YES >> GO TO 3.
NO >> Repair harness or connector.

3. CHECK INTAKE SENSOR

Check intake sensor. Refer to HAC-173, "Component Inspection".

Is the inspection result normal?

YES >> Replace A/C auto amp.
NO >> Replace intake sensor.

4. CHECK CIRCUIT CONTINUITY BETWEEN INTAKE SENSOR AND A/C AUTO AMP.

1. Turn ignition switch OFF.
2. Disconnect A/C auto amp. connector.
3. Check continuity between intake sensor harness connector and A/C auto amp. harness connector.

Intake sensor		A/C auto amp.		Continuity
Connector	Terminal	Connector	Terminal	
M42	2	M50	16	Existed

4. Check continuity between intake sensor harness connector and ground.

Intake sensor		—	Continuity
Connector	Terminal		
M42	2	Ground	Not existed

Is the inspection result normal?

YES >> Replace A/C auto amp.
NO >> Repair harness or connector.

Component Inspection

INFOID:0000000003884751

1. CHECK INTAKE SENSOR

1. Turn ignition switch OFF.
2. Disconnect intake sensor connector.
3. Check resistance between intake sensor terminals.

Terminal		Condition Temperature °C (°F)	Resistance kΩ
1	2	–15 (5)	17.73
		–10 (14)	13.46
		–5 (23)	10.33
		0 (32)	8.00
		5 (41)	6.26
		10 (50)	4.93
		15 (59)	3.92
		20 (68)	3.14
		25 (77)	2.54
		30 (86)	2.06
		35 (95)	1.69
		40 (104)	1.39
		45 (113)	1.15

Is the inspection result normal?

YES >> END.
NO >> Replace intake sensor.

B262A, B262B, B2657, B2658 GAS SENSOR WITH INTELLIGENT AIR CONDITIONER SYSTEM

WITH INTELLIGENT AIR CONDITIONER SYSTEM : Description

INFOID:0000000003884752

COMPONENT DESCRIPTION

Gas Sensor

The gas sensor (1) is attached on the bumper upper retainer. It detects smell of exhaust gas and converts it into a duty ratio which is then input into the A/C auto amp.

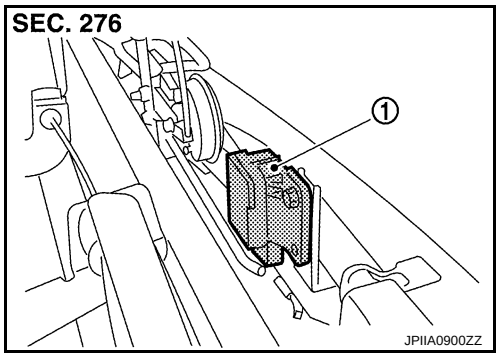

Gas Sensor Circuit

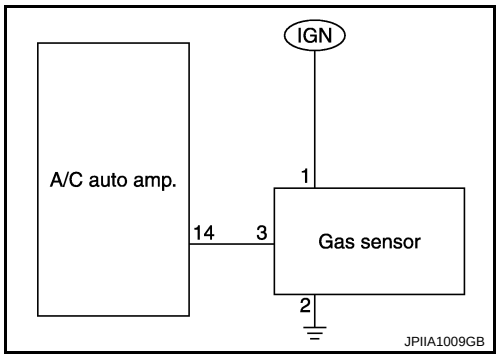

SMELL OF EXHAUST GAS INPUT PROCESS

Gas sensor detects ambient atmospheric CO and NO_2, and converts them to values of resistance. The values are converted to signals with the gas sensor internal circuit, then auto amp. inputs the signals.

Gas sensor has a construction that detects CO and NO_2 by gas sensor element from the air intake of the case through a filter (waterproof sheet). It sends output signals to auto amp. in response to a resistance value conversion by gas sensor elements. Output signals prevent a smell of exhaust gas from getting into vehicle by performing corrections according to various driving conditions.

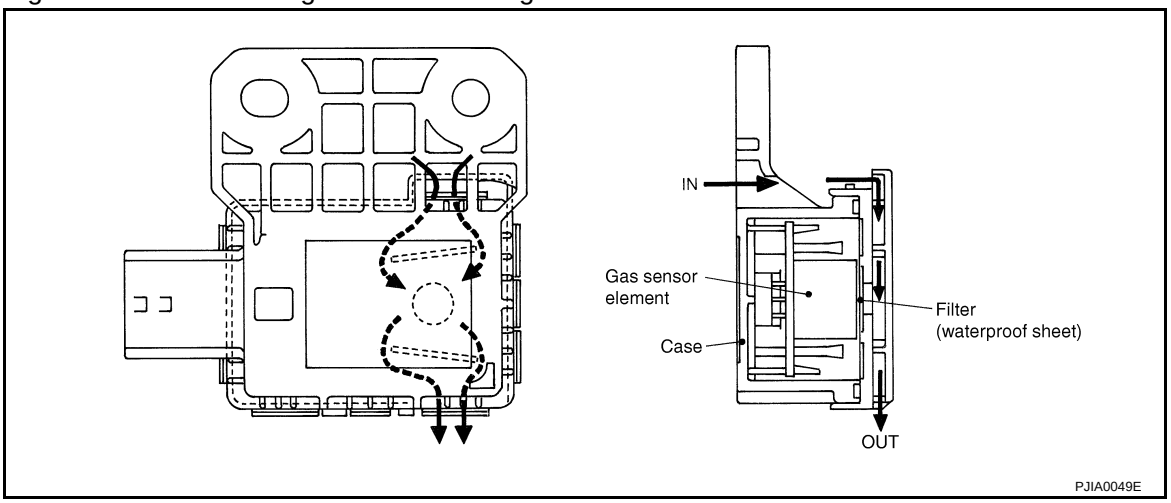

WITH INTELLIGENT AIR CONDITIONER SYSTEM : DTC Logic

INFOID:0000000003884753

DTC DETECTION LOGIC

NOTE:
If DTC is displayed along with DTC U1000 or U1010, first diagnose the DTC U1000 or U1010. Refer to HAC-164, "DTC Logic" or HAC-165, "DTC Logic".

DTC	Items (CONSULT-III screen terms)	Diagnostic item is detected when...	Possible cause
B262A	GAS SENSOR (SHORT)	Gas sensor duty 10% or less	• Gas sensor • A/C auto amp. • Harness and connector (Gas sensor circuit is open, or there is a short in the circuit)
B262B	GAS SENSOR (OPEN)	Gas sensor duty 90% or more	
B2657	GAS SENSOR CIRCUIT (SHORT)	Gas sensor duty 0%	
B2658	GAS SEN CIRCUIT (OPEN)	Gas sensor duty 100%	

DTC CONFIRMATION PROCEDURE

1. CHECK WITH SELF-DIAGNOSIS FUNCTION OF CONSULT-III

1. Using CONSULT-III, perform “SELF-DIAGNOSIS RESULTS” of HVAC.
2. Check if any DTC is displayed in the self-diagnosis results.

NOTE:
If DTC is displayed along with DTC U1000 or U1010, first diagnose the DTC U1000 or U1010. Refer to HAC-164, "DTC Logic" or HAC-165, "DTC Logic".

Is DTC “B262A”, “B262B”, “B2657” or “B2658” displayed?

YES >> Perform trouble diagnosis for the gas sensor. Refer to HAC-176, "WITH INTELLIGENT AIR CONDITIONER SYSTEM : Diagnosis Procedure".
NO >> INSPECTION END

WITH INTELLIGENT AIR CONDITIONER SYSTEM : Diagnosis Procedure INFOID:0000000003884754

1. ADJUST GAS SENSOR SENSITIVITY AND CLEAN SWITCH INTERLOCKING CHANGE

1. Turn ignition switch ON.
2. Adjust the gas sensor sensitivity and clean switch interlocking change. Refer to HAC-116, "WITH INTELLIGENT AIR CONDITIONER SYSTEM : Gas Sensor Sensitivity Adjustment Function (With Intelligent Air Conditioner System)" and HAC-116, "WITH INTELLIGENT AIR CONDITIONER SYSTEM : Clean Switch Interlocking Movement Change Function (With Intelligent Air Conditioner System)".

Is the inspection result normal?

YES >> INSPECTION END
NO >> GO TO 2.

2. CHECK POWER SUPPLY FOR GAS SENSOR

1. Turn ignition switch OFF.
2. Disconnect gas sensor connector.
3. Turn ignition switch ON.
4. Check voltage between gas sensor harness connector and ground.

(+)		(–)	Voltage
Gas sensor		—	
Connector	Terminal		
E351	1	Ground	Battery voltage

Is the inspection result normal?

YES >> GO TO 3.
NO >> Check power supply circuit and 10A fuse (No. 3, located in the fuse block). Refer to PG-101, "Fuse, Connector and Terminal Arrangement".
- If fuse is OK, check harness for open circuit. Repair or replace if necessary.
- If fuse is NG, check harness for short circuit and replace fuse.

3. CHECK GROUND CIRCUIT FOR GAS SENSOR

1. Turn ignition switch OFF.
2. Check continuity between gas sensor harness connector and ground.

Gas sensor		—	Continuity
Connector	Terminal		
E351	2	Ground	Existed

Is the inspection result normal?

YES >> GO TO 4.
NO >> Repair harness or connector.

4. CHECK GAS SENSOR SIGNAL

1. Reconnect gas sensor connector.
2. Turn ignition switch ON.
3. Check signal between A/C auto amp. connector using an oscilloscope.

(+)		(–)	Voltage
A/C auto amp.		—	
Connector	Terminal		
M50	14	Ground	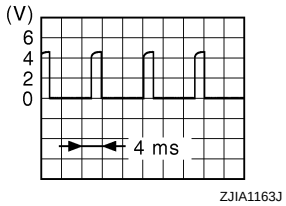

NOTE:
The signal is different by measurement environment of a vehicle.

Is the inspection result normal?

YES >> Replace A/C auto amp.
NO >> Replace gas sensor.

B2630, B2631 SUNLOAD SENSOR

Description

INFOID:0000000003884756

COMPONENT DESCRIPTION

Sunload Sensor

- The sunload sensor (1) is located on the driver's side speaker grille.
- It detects sunload entering through windshield by means of a photo diode. The sensor converts the sunload into a current value which is then input into the A/C auto amp.

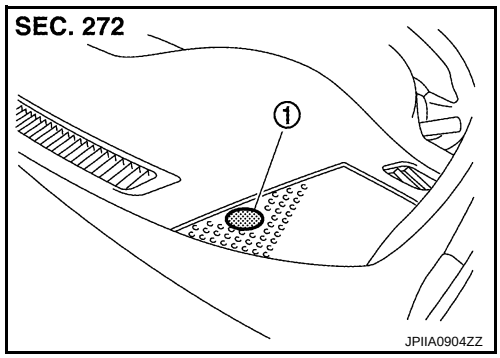

Sunload Sensor Circuit

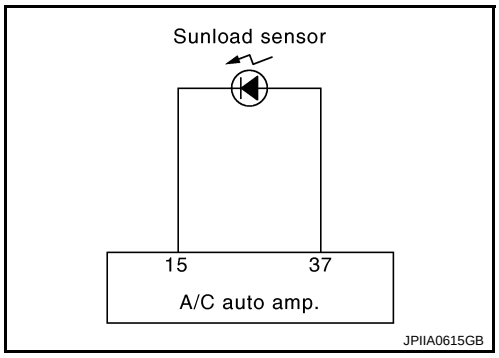

SUNLOAD INPUT PROCESS

The A/C auto amp. also equips a processing circuit which averages the variations in detected sunload over a period of time. This prevents drastic swings in the air temperature control system operation due to small or quick variations in detected sunload.

For example, consider driving along a road bordered by an occasional group of large trees. The sunload detected by the sunload sensor varies whenever the trees obstruct the sunlight. The processing circuit averages the detected sunload over a period of time, so that the (insignificant) effect of the trees momentarily obstructing the sunlight does not cause any change in the air temperature control system operation. On the other hand, shortly after entering a long tunnel, the system recognizes the change in sunload, and the system reacts accordingly.

DTC Logic

INFOID:0000000003884757

DTC DETECTION LOGIC

NOTE:

- If DTC is displayed along with DTC U1000 or U1010, first diagnose the DTC U1000 or U1010. Refer to HAC-164, "DTC Logic" or HAC-165, "DTC Logic".
- Sunload sensor may register a malfunction when indoors, at dusk, or at other times when light is insufficient. When performing the diagnosis indoors, light the sunload sensor with a lamp (60 W or more).

DTC	Items (CONSULT-III screen terms)	Diagnostic item is detected when...	Possible cause
B2630	SUNLOAD SEN (SHORT)	Detected calorie at sunload sensor 64.7 W/m^2 (30 kcal/m^2·h) or less	• Sunload sensor • A/C auto amp. • Harness and connector (Sunload sensor circuit is open, or there is a short in the circuit)
B2631	SUNLOAD SEN (OPEN)	Detected calorie at sunload sensor 2832 W/m^2 (1304 kcal/m^2·h) or more	

DTC CONFIRMATION PROCEDURE

1. CHECK WITH SELF-DIAGNOSIS FUNCTION OF CONSULT-III

1. Using CONSULT-III, perform “SELF-DIAGNOSIS RESULTS” of HVAC.
2. Check if any DTC is displayed in the self-diagnosis results.

NOTE:

- If DTC is displayed along with DTC U1000 or U1010, first diagnose the DTC U1000 or U1010. Refer to HAC-164, "DTC Logic" or HAC-165, "DTC Logic".
- Sunload sensor may register a malfunction when indoors, at dusk, or at other times when light is insufficient. When performing the diagnosis indoors, light the sunload sensor with a lamp (60 W or more).

Is DTC “B2630” or “B2631” displayed?

YES >> Perform trouble diagnosis for the sunload sensor. Refer to HAC-179, "Diagnosis Procedure".
NO >> INSPECTION END

Diagnosis Procedure

INFOID:0000000003884758

1. CHECK VOLTAGE BETWEEN SUNLOAD SENSOR AND GROUND

1. Disconnect sunload sensor connector.
2. Turn ignition switch ON.
3. Check voltage between sunload sensor harness connector and ground.

(+)		(–)	Voltage
Sunload sensor		—	
Connector	Terminal		
M74	1	Ground	Approx. 5 V

Is the inspection result normal?

YES >> GO TO 2.
NO >> GO TO 4.

2. CHECK CIRCUIT CONTINUITY BETWEEN SUNLOAD SENSOR AND A/C AUTO AMP.

1. Turn ignition switch OFF.
2. Disconnect A/C auto amp. connector.
3. Check continuity between sunload sensor harness connector and A/C auto amp. harness connector.

Sunload sensor		A/C auto amp.		Continuity
Connector	Terminal	Connector	Terminal	
M74	2	M50	37	Existed

Is the inspection result normal?

YES >> GO TO 3.
NO >> Repair harness or connector.

3. CHECK SUNLOAD SENSOR

1. Reconnect sunload sensor connector and A/C auto amp. connector.
2. Check sunload sensor. Refer to HAC-180, "Component Inspection".

Is the inspection result normal?

YES >> Replace A/C auto amp.
NO >> Replace sunload sensor.

4. CHECK CIRCUIT CONTINUITY BETWEEN SUNLOAD SENSOR AND A/C AUTO AMP.

1. Turn ignition switch OFF.
2. Disconnect A/C auto amp. connector.
3. Check continuity between sunload sensor harness connector and A/C auto amp. harness connector.

Sunload sensor		A/C auto amp.		Continuity
Connector	Terminal	Connector	Terminal	
M74	1	M50	15	Existed

4. Check continuity between sunload sensor harness connector and ground.

Sunload sensor		—	Continuity
Connector	Terminal		
M74	1	Ground	Not existed

Is the inspection result normal?

YES >> Replace A/C auto amp.
NO >> Repair harness or connector.

Component Inspection

INFOID:0000000003884759

1. CHECK SUNLOAD SENSOR

1. Turn ignition switch ON.
2. Check voltage between A/C auto amp. harness connector and ground.

(+)		(–)
A/C auto amp.		—
Connector	Terminal	
M50	15	Ground

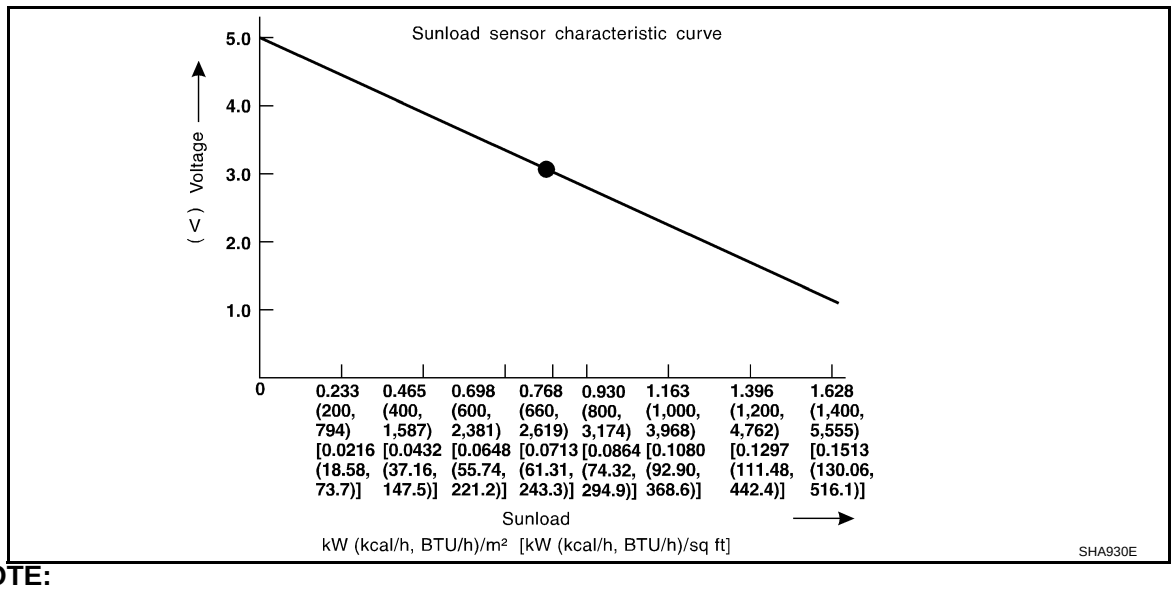

NOTE:
Select a place where sunshine directly on it when checking sunload sensor.

Is the inspection result normal?

YES >> END.
NO >> Replace sunload sensor.

B2632, B2633 AIR MIX DOOR MOTOR (DRIVER SIDE)

Description

INFOID:0000000003884760

COMPONENT DESCRIPTION

Air Mix Door Motor (Driver Side)

- The air mix door motor (driver side) (1) are attached to the heater & cooling unit assembly.

⇦: Vehicle front

- It rotates so that the air mix door is opened or closed to a position set by the A/C auto amp.
- Motor rotation is then conveyed through a shaft and the air mix door position feedback is then sent to the A/C auto amp. by PBR built-in air mix door motor.

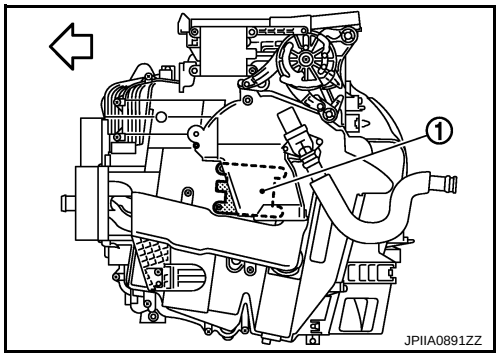

DTC Logic

INFOID:0000000003884761

DTC DETECTION LOGIC

NOTE:
If DTC is displayed along with DTC U1000 or U1010, first diagnose the DTC U1000 or U1010. Refer to HAC-164, "DTC Logic" or HAC-165, "DTC Logic".

DTC	Items (CONSULT-III screen terms)	Diagnostic item is detected when...	Possible cause
B2632	DR AIRMIX ACTR (SHORT)	Air mix door PBR (driver side) position 5% or less	• Air mix door motor (driver side) • A/C auto amp. • Harness and connector (CAN communication line is open or shorted) (Air mix door motor is open or shorted)
B2633	DR AIRMIX ACTR (OPEN)	Air mix door PBR (driver side) position 95% or more	

DTC CONFIRMATION PROCEDURE

1. CHECK WITH SELF-DIAGNOSIS FUNCTION OF CONSULT-III

1. Using CONSULT-III, perform “SELF-DIAGNOSIS RESULTS” of HVAC.
2. Check if any DTC is displayed in the self-diagnosis results.

NOTE:
If DTC is displayed along with DTC U1000 or U1010, first diagnose the DTC U1000 or U1010. Refer to HAC-164, "DTC Logic" or HAC-165, "DTC Logic".

Is DTC “B2632” or “B2633” displayed?

YES >> Perform trouble diagnosis for the air mix door motor (driver side). Refer to HAC-182, "Diagnosis Procedure".
NO >> GO TO 2.

2. FUNCTION INSPECTION

1. Press temperature control “UP” switch (driver side) until 32°C (90°F) is displayed.
2. Check for warm air at discharge air outlets.
3. Operate the compressor.
4. Press temperature control “DOWN” switch (driver side) until 18°C (60°F) is displayed.
5. Check for cool air at air discharge outlets.

Does it operate normally?

YES >> END.
NO >> Check air mix door motor (driver side) installation, and repair or replace the malfunctioning parts.

Diagnosis Procedure

INFOID:0000000003884762

1. CHECK POWER SUPPLY FOR AIR MIX DOOR MOTOR (DRIVER SIDE)

Check voltage between air mix door motor (driver side) harness connector and ground.

(+)		(–)	Voltage
Air mix door motor (driver side)		—	
Connector	Terminal		
M306	1	Ground	Battery voltage

Is the inspection result normal?

YES >> GO TO 2.
NO >> Repair the harnesses or connectors.

2. CHECK SIGNAL FOR AIR MIX DOOR MOTOR (DRIVER SIDE)

Check the output waveform (LAN signal) between air mix door motor (driver side) harness connector and ground using an oscilloscope.

(+)		(–)	Voltage
Air mix door motor (driver side)		—	
Connector	Terminal		
M306	3	Ground	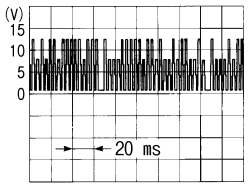 SJIA1453J

Is the inspection result normal?

YES >> GO TO 3.
NO >> Repair the harnesses or connectors.

3. CHECK AIR MIX DOOR MOTOR (DRIVER SIDE) GROUND CIRCUIT

1. Turn ignition switch OFF.
2. Disconnect air mix door motor (driver side) connector.
3. Check continuity between air mix door motor (driver side) harness connector and ground.

Air mix door motor (driver side)		—	Continuity
Connector	Terminal		
M306	2	Ground	Existed

Is the inspection result normal?

YES >> Replace air mix door motor (driver side).
NO >> Repair harness or connector.

B2634, B2635 AIR MIX DOOR MOTOR (PASSENGER SIDE)

Description

INFOID:0000000003884763

COMPONENT DESCRIPTION

Air Mix Door Motor (Passenger Side)

- The air mix door motor (passenger side) (1) are attached to the heater & cooling unit assembly.

⇦: Vehicle front

- It rotates so that the air mix door is opened or closed to a position set by the A/C auto amp.
- Motor rotation is then conveyed through a shaft and the air mix door position feedback is then sent to the A/C auto amp. by PBR built-in air mix door motor.

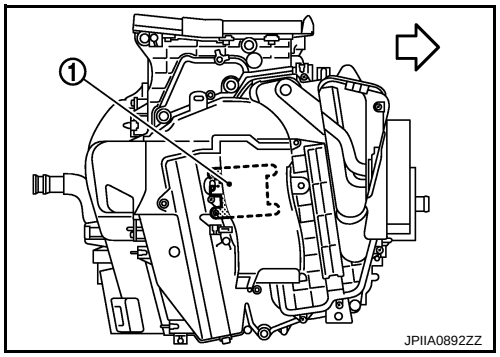

DTC Logic

INFOID:0000000003884764

DTC DETECTION LOGIC

NOTE:
If DTC is displayed along with DTC U1000 or U1010, first diagnose the DTC U1000 or U1010. Refer to HAC-164, "DTC Logic" or HAC-165, "DTC Logic".

DTC	Items (CONSULT-III screen terms)	Diagnostic item is detected when...	Possible cause
B2634	PASS AIRMIX ACTR (SHORT)	Air mix door PBR (passenger side) position 5% or less	• Air mix door motor (passenger side) • A/C auto amp. • Harness and connector (CAN communication line is open or shorted) (Air mix door motor is open or shorted)
B2635	PASS AIRMIX ACTR (OPEN)	Air mix door PBR (passenger side) position 95% or more	

DTC CONFIRMATION PROCEDURE

1. CHECK WITH SELF-DIAGNOSIS FUNCTION OF CONSULT-III

1. Using CONSULT-III, perform “SELF-DIAGNOSIS RESULTS” of HVAC.
2. Check if any DTC is displayed in the self-diagnosis results.

NOTE:
If DTC is displayed along with DTC U1000 or U1010, first diagnose the DTC U1000 or U1010. Refer to HAC-164, "DTC Logic" or HAC-165, "DTC Logic".

Is DTC “B2634” or “B2635” displayed?

YES >> Perform trouble diagnosis for the air mix door motor (passenger side). Refer to HAC-184, "Diagnosis Procedure".
NO >> GO TO 2.

2. FUNCTION INSPECTION

1. Press temperature control “UP” switch (passenger side) until 32°C (90°F) is displayed.
2. Check for warm air at discharge air outlets.
3. Operate the compressor.
4. Press temperature control “DOWN” switch (passenger side) until 18°C (60°F) is displayed.
5. Check for cool air at air discharge outlets.

Does it operate normally?

YES >> END.
NO >> Check air mix door motor (passenger side) installation, and repair or replace the malfunctioning parts.

Diagnosis Procedure

INFOID:0000000003884765

1. CHECK POWER SUPPLY FOR AIR MIX DOOR MOTOR (PASSENGER SIDE)

Check voltage between air mix door motor (passenger side) harness connector and ground.

(+)		(–)	Voltage
Air mix door motor (passenger side)		—	
Connector	Terminal		
M307	1	Ground	Battery voltage

Is the inspection result normal?

YES >> GO TO 2.
NO >> Repair the harnesses or connectors.

2. CHECK SIGNAL FOR AIR MIX DOOR MOTOR (PASSENGER SIDE)

Check the output waveform (LAN signal) between air mix door motor (passenger side) harness connector and ground using an oscilloscope.

(+)		(–)	Voltage
Air mix door motor (passenger side)		—	
Connector	Terminal		
M307	3	Ground	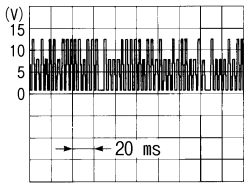 SJIA1453J

Is the inspection result normal?

YES >> GO TO 3.
NO >> Repair the harnesses or connectors.

3. CHECK AIR MIX DOOR MOTOR (PASSENGER SIDE) GROUND CIRCUIT

1. Turn ignition switch OFF.
2. Disconnect air mix door motor (passenger side) connector.
3. Check continuity between air mix door motor (passenger side) harness connector and ground.

Air mix door motor (passenger side)		—	Continuity
Connector	Terminal		
M307	2	Ground	Existed

Is the inspection result normal?

YES >> Replace air mix door motor (passenger side).
NO >> Repair harness or connector.

B2636, B2637, B2638, B2639, B2654, B2655 MODE DOOR MOTOR

Description

INFOID:0000000003884766

COMPONENT DESCRIPTION

Mode Door Motor

- The mode door motor (1) are attached to the heater & cooling unit assembly.

⇦: Vehicle front

- It rotates so that air is discharged from the outlet set by the A/C auto amp. Motor rotation is conveyed to a link which activates the mode door.

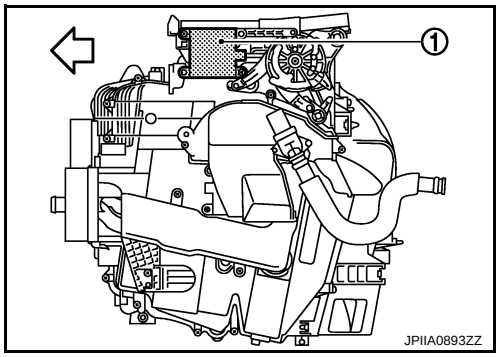

DTC Logic

INFOID:0000000003884767

DTC DETECTION LOGIC

NOTE:
If DTC is displayed along with DTC U1000 or U1010, first diagnose the DTC U1000 or U1010. Refer to HAC-164, "DTC Logic".

DTC	Items (CONSULT-III screen terms)	Diagnostic item is detected when...	Possible cause
B2636	DR VENT DOOR FAIL	When the malfunctioning door position is detected at VENT position	• Mode door motor • A/C auto amp. • Harness and connector (CAN communication line is open or shorted) (Mode door motor is open or shorted)
B2637	DR B/L DOOR FAIL	When the malfunctioning door position is detected at B/L position	
B2638	DR D/F1 DOOR FAIL	When the malfunctioning door position is detected at FOOT position	
B2639	DR DEF DOOR FAIL	When the malfunctioning door position is detected at DEF position	
B2654	D/F2 DOOR FAIL	When the malfunctioning door position is detected at D/F position	
B2655	B/L2 DOOR FAIL	When the malfunctioning door position is detected at B/L2 position	

DTC CONFIRMATION PROCEDURE

1. CHECK WITH SELF-DIAGNOSIS FUNCTION OF CONSULT-III

1. Using CONSULT-III, perform “SELF-DIAGNOSIS RESULTS” of HVAC.
2. Check if any DTC is displayed in the self-diagnosis results.

NOTE:
If DTC is displayed along with DTC U1000 or U1010, first diagnose the DTC U1000 or U1010. Refer to HAC-164, "DTC Logic" or HAC-165, "DTC Logic".

Is DTC “ B2636 ”, “ B2637 ”, “B2638 ”, “B2639 ”, “B2654 ” or “B2655 ” displayed?

YES >> Perform trouble diagnosis for the mode door motor. Refer to HAC-186, "Diagnosis Procedure".
NO >> GO TO 2.

2. FUNCTION INSPECTION

1. Press MODE switch and DEF switch.
2. Each position indicator should change shape.
3. Confirm that air discharge comes out according to the air distribution table at below. Refer to HAC-122, "WITHOUT INTELLIGENT AIR CONDITIONER SYSTEM : System Description" (WITHOUT INTELLI-

GENT AIR CONDITIONER SYSTEM) or HAC-133, "WITH INTELLIGENT AIR CONDITIONER SYSTEM : System Description" (WITH INTELLIGENT AIR CONDITIONER SYSTEM).

Discharge air flow						
Mode position indication	Condition	Air outlet/distribution				
		VENT		FOOT		DEF
		Front	Rear	Front	Rear	
	DUAL switch: OFF Rear ventilator : OPEN	89%	11%	—	—	—
		46%	17%	27%	10%	—
		14%	16%	34%	14%	22%
		12%	16%	27%	13%	32%
		11%	12%	—	—	77%

JPIIA0877GB

NOTE:
Confirm that the compressor clutch is engaged (Sound or visual inspection) and intake door position is at FRE when DEF is selected.

Does it operate normally?

YES >> END.
NO >> Check mode door motor installation, and repair or replace the malfunctioning parts.

Diagnosis Procedure

INFOID:0000000003884768

1. CHECK POWER SUPPLY FOR MODE DOOR MOTOR

Check voltage between mode door motor harness connector and ground.

(+)		(–)	Voltage
Mode door motor		—	
Connector	Terminal		
M310	1	Ground	Battery voltage

Is the inspection result normal?

YES >> GO TO 2.
NO >> Repair harness or connector.

2. CHECK SIGNAL FOR MODE DOOR MOTOR

Confirm A/C LAN signal between mode door motor harness connector and ground using an oscilloscope.

(+)		(–)	Voltage
Mode door motor		—	
Connector	Terminal		
M310	3	Ground	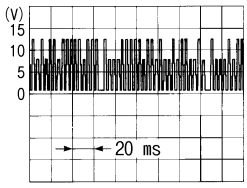 SJIA1453J

Is the inspection result normal?

YES >> GO TO 3.
NO >> Repair harness or connector.

3. CHECK MODE DOOR MOTOR GROUND CIRCUIT

1. Turn ignition switch OFF.
2. Disconnect mode door motor connector.
3. Check continuity between mode door motor harness connector and ground.

Mode door motor		—	Continuity
Connector	Terminal		
M310	2	Ground	Existed

Is the inspection result normal?

YES >> Replace mode door motor.
NO >> Repair harness or connector.

B263D B263E, B263F, B2656 INTAKE DOOR MOTOR

Description

INFOID:0000000003884769

COMPONENT DESCRIPTION

Intake Door Motor

- The intake door motor (1) is attached to the blower unit.

⇦: Vehicle front

- It rotates so that air is drawn from inlets set by the A/C auto amp. Motor rotation is conveyed to a lever which activates the intake door.

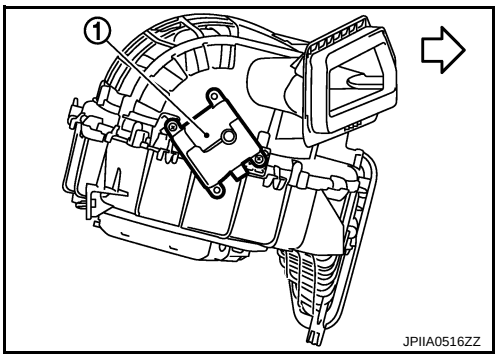

DTC Logic

INFOID:0000000003884770

DTC DETECTION LOGIC

NOTE:

If DTC is displayed along with DTC U1000 or U1010, first diagnose the DTC U1000 or U1010. Refer to HAC-164, "DTC Logic" or HAC-165, "DTC Logic".

DTC	Items (CONSULT-III screen terms)	Diagnostic item is detected when...	Possible cause
B263D	FRE DOOR FAIL	When the malfunctioning intake door position is detected at FRE position	• Intake door motor • A/C auto amp. • Harness and connector (CAN communication line is open or shorted) (Intake door motor is open or shorted)
B263E	20P FRE DOOR FAIL	When the malfunctioning intake door position is detected at 20%FRE position	
B263F	REC DOOR FAIL	When the malfunctioning intake door position is detected at REC position	
B2656	BTC FRE DOOR FAIL	When the malfunctioning intake door position is detected	

DTC CONFIRMATION PROCEDURE

1. CHECK WITH SELF-DIAGNOSIS FUNCTION OF CONSULT-III

1. Using CONSULT-III, perform “SELF-DIAGNOSIS RESULTS” of HVAC.
2. Check if any DTC is displayed in the self-diagnosis results.

NOTE:

If DTC is displayed along with DTC U1000 or U1010, first diagnose the DTC U1000 or U1010. Refer to HAC-164, "DTC Logic" or HAC-165, "DTC Logic".

Is DTC “B263D”, “B263E”, “B263F” or “B2656” displayed?

YES >> Perform trouble diagnosis for the intake door motor. Refer to HAC-189, "Diagnosis Procedure".
NO >> • WITHOUT INTELLIGENT AIR CONDITIONER SYSTEM : GO TO 2.
• WITH INTELLIGENT AIR CONDITIONER SYSTEM : GO TO 3.

2. FUNCTION INSPECTION (WITHOUT INTELLIGENT AIR CONDITIONER SYSTEM)

1. Press REC switch.
2. The REC switch indicator is turned ON. (REC position)
3. Listen for intake door position change (Slight change of blower sound can be heard.).
4. Press FRE switch.
5. The FRE switch indicator is turned ON. (FRE position)
6. Listen for intake door position change (Slight change of blower sound can be heard.).

Does it operate normally?

YES >> INSPECTION END
NO >> Check intake door motor installation, and repair or replace the malfunctioning parts.

3. FUNCTION INSPECTION (WITH INTELLIGENT AIR CONDITIONER SYSTEM)

1. Press intake switch.
2. The intake switch indicator is turned ON. (REC position)
3. Listen for intake door position change (Slight change of blower sound can be heard.).
4. Press intake switch again.
5. The intake switch indicator is turned ON. (FRE position)
6. Listen for intake door position change (Slight change of blower sound can be heard.).

Does it operate normally?

YES >> INSPECTION END
NO >> Check intake door motor installation, and repair or replace the malfunctioning parts.

Diagnosis Procedure

INFOID:0000000003884771

1. CHECK POWER SUPPLY FOR INTAKE DOOR MOTOR

Check voltage between intake door motor harness connector and ground.

(+)		(–)	Voltage
Intake door motor		—	
Connector	Terminal		
M304	1	Ground	Battery voltage

Is the inspection result normal?

YES >> GO TO 2.
NO >> Repair harness or connector.

2. CHECK SIGNAL FOR INTAKE DOOR MOTOR

Confirm A/C LAN signal between intake door motor harness connector and ground using an oscilloscope.

(+)		(–)	Voltage
Intake door motor		—	
Connector	Terminal		
M304	3	Ground	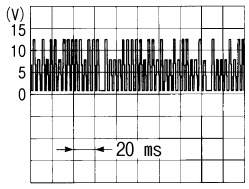 SJIA1453J

Is the inspection result normal?

YES >> GO TO 3.
NO >> Repair harness or connector.

3. CHECK INTAKE DOOR MOTOR GROUND CIRCUIT

1. Turn ignition switch OFF.
2. Disconnect intake door motor connector.
3. Check continuity between intake door motor harness connector and ground.

Intake door motor		—	Continuity
Connector	Terminal		
M304	2	Ground	Existed

Is the inspection result normal?

YES >> Replace intake door motor.
NO >> Repair harness or connector.

POWER SUPPLY AND GROUND CIRCUIT
A/C AUTO AMP.

A/C AUTO AMP. : Diagnosis Procedure

INFOID:0000000003941319

1. CHECK FUSE

Check 10A fuses [Nos. 3, 6 and 19, located in the fuse block (J/B)].
NOTE:
Refer to PG-101, "Fuse, Connector and Terminal Arrangement".

Is the inspection result normal?

YES >> GO TO 2.
NO >> Replace the fuse after repairing the applicable circuit.

2. CHECK A/C AUTO AMP. POWER SUPPLY CIRCUIT

1. Disconnect the A/C auto amp. connector.
2. Check voltage between A/C auto amp. harness connector and ground.

(+)		(–)	Voltage		
A/C auto amp.		—	Ignition switch position		
Connector	Terminal		OFF	ACC	ON
M50	17	Ground	Approx. 0 V	Battery voltage	Battery voltage
	20		Approx. 0 V	Approx. 0 V	Battery voltage
	40		Battery voltage	Battery voltage	Battery voltage

Is the inspection result normal?

YES >> GO TO 3.
NO >> Repair the harnesses or connectors.

3. CHECK A/C AUTO AMP. CIRCUIT CONTINUITY

1. Turn ignition switch OFF.
2. Check continuity between A/C auto amp. harness connector and ground.

A/C auto amp.		—	Continuity
Connector	Terminal		
M50	19	Ground	Existed
	39		

Is the inspection result normal?

YES >> INSPECTION END
NO >> Repair the harnesses or connectors.

A/C AUTO AMP.

Description

INFOID:0000000003941321

COMPONENT DESCRIPTION

A/C Auto Amp. (Air Conditioner Automatic Amplifier)
The A/C auto amp. (1) has a built-in microcomputer that processes information sent from various sensors needed for air conditioner operation. The air mix door motors, the mode door motor, the intake door motor, the blower motor and the compressor are then controlled.
When the various switches and temperature control dial are operated, data is input to the A/C auto amp. from the A/C control.

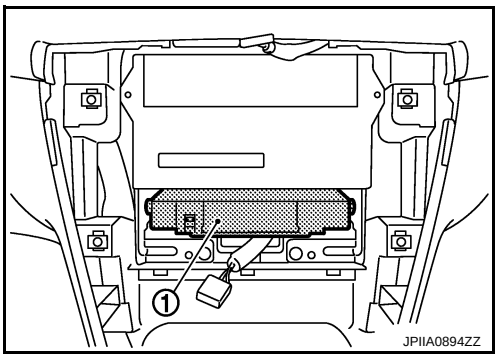

Component Function Check

INFOID:0000000003940728

1. CHECK OPERATION

1. Press the AUTO switch, and then check that “AUTO” is shown on the display.
2. Operate the temperature control dial (driver side). Check that the fan speed or outlet changes. (The discharge air temperature or fan speed varies depending on the ambient temperature, in-vehicle temperature, and temperature setting.)

Does it operate normally?

YES >> INSPECTION END
NO >> Perform trouble diagnosis for the A/C system. Refer to HAC-192, "Diagnosis Procedure".

Diagnosis Procedure

INFOID:0000000003940729

1. INSPECTION BY FAIL-SAFE FUNCTION

1. Turn the ignition switch ON.
2. After approximately 30 seconds, check that the air conditioner is operated by the fail-safe function (the operation display of air conditioner is not performed). Refer to HAC-211, "WITHOUT INTELLIGENT AIR CONDITIONER SYSTEM : Fail-Safe" (WITHOUT INTELLIGENT AIR CONDITIONER SYSTEM) or HAC-223, "WITH INTELLIGENT AIR CONDITIONER SYSTEM : Fail-Safe" (WITH INTELLIGENT AIR CONDITIONER SYSTEM).

Is the fail-safe function operated?

YES >> GO TO 3.
NO >> GO TO 2.

2. CHECK A/C AUTO AMP. POWER SUPPLY CIRCUIT AND GROUND

Check A/C auto amp. power supply circuit and ground circuit. Refer to HAC-192, "Diagnosis Procedure".

Is the inspection result normal?

YES >> GO TO 3.
NO >> Repair or replace parts according to the inspection results.

3. CHECK PRESET SWITCH

Check the preset switch. Refer to AV-164, "Symptom Table" (BASE AUDIO AND DISPLAY SYSTEM), AV-372, "Symptom Table" (BOSE AUDIO WITHOUT NAVIGATION) or AV-640, "Symptom Table" (BOSE AUDIO WITH NAVIGATION).

Is the inspection result normal?

YES >> Replace the A/C auto amp.
NO >> Repair or replace parts according to the inspection results.

BLOWER MOTOR

Description

INFOID:0000000003884772

COMPONENT DESCRIPTION

Brush-less Motor

The blower motor utilizes a brush-less motor with a rotating magnet. Quietness is improved over previous motors where the brush was the point of contact and the coil rotated.

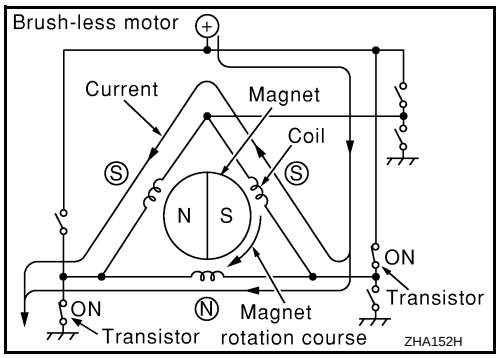

Blower Motor Circuit

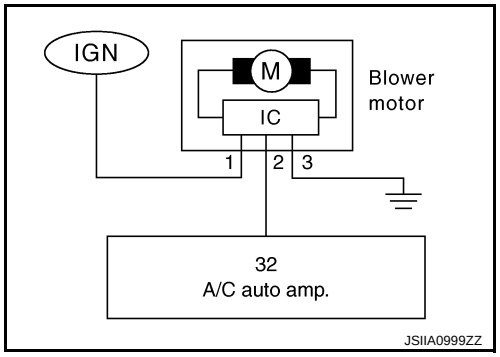

Component Function Check

INFOID:0000000003884773

1. CHECK OPERATION

1. Warm up the engine.
2. Operate the fan control dial. Check that the fan speed and indicator are switched for all fan speeds.

Does it operate normally?

YES >> INSPECTION END
NO >> Perform trouble diagnosis for the blower motor. Refer to HAC-193, "Diagnosis Procedure".

Diagnosis Procedure

INFOID:0000000003884774

1. CHECK WITH SELF-DIAGNOSIS FUNCTION OF CONSULT-III

1. Using CONSULT-III, perform “SELF-DIAGNOSIS RESULTS” of HVAC.
2. Check if any DTC is displayed in the self-diagnosis results.

NOTE:
If DTC is displayed along with DTC U1000 or U1010, first diagnose the DTC U1000 or U1010. Refer to HAC-164, "DTC Logic" or HAC-165, "DTC Logic".

Is any DTC displayed?

YES >> Perform the diagnosis that is applicable to the sensor and actuator. Refer to HAC-212, "WITHOUT INTELLIGENT AIR CONDITIONER SYSTEM : DTC Index"WITHOUT INTELLIGENT AIR CONDITIONER SYSTEM) or HAC-224, "WITH INTELLIGENT AIR CONDITIONER SYSTEM : DTC Index" (WITH INTELLIGENT AIR CONDITIONER SYSTEM).
NO >> GO TO 2.

2. CHECK WITH ACTIVE TEST OF CONSULT-III

1. Using CONSULT-III, perform “HVAC TEST” “ACTIVE TEST” of HVAC to check each output device. Refer to HAC-156, "WITHOUT INTELLIGENT AIR CONDITIONER SYSTEM : CONSULT-III Function" (WITH-

OUT INTELLIGENT AIR CONDITIONER SYSTEM) or HAC-159, "WITH INTELLIGENT AIR CONDITIONER SYSTEM : CONSULT-III Function" (WITH INTELLIGENT AIR CONDITIONER SYSTEM).

NOTE:

Perform the ACTIVE TEST after starting the engine because the compressor is operated.

2. Check that the blower motor control signal changes according to each indicator signal.

	Test item						
	MODE 1	MODE 2	MODE 3	MODE 4	MODE 5	MODE 6	MODE 7
Mode door position	VENT	B/L1	B/L2	AUTO FOOT	D/F	DEF	-
Intake door position	REC	REC	20% FRE	FRE	FRE	FRE	-
Air mix door position (driver & passenger side)	FULL COLD	FULL COLD	FULL HOT	FULL HOT	FULL HOT	FULL HOT	-
Blower motor duty ratio	37%	91%	65%	65%	65%	91%	-
Compressor (Magnet clutch)	ON	ON	OFF	OFF	ON	ON	-

NOTE:

- Perform the inspection of each output device after starting the engine because the compressor is operated.
- When choosing to “MODE 7”, error message is displayed but it is not malfunction.

Does it operate normally?

YES >> INSPECTION END
NO >> GO TO 3.

3. CHECK POWER SUPPLY FOR BLOWER MOTOR

1. Disconnect blower motor connector.
2. Turn ignition switch ON.
3. Check voltage between blower motor harness connector and ground.

(+)		(–)	Voltage
Blower motor		—	
Connector	Terminal		
M98	1	Ground	Battery voltage

Is the inspection result normal?

YES >> GO TO 4.
NO >> GO TO 7.

4. CHECK BLOWER MOTOR GROUND CIRCUIT

1. Turn ignition switch OFF.
2. Check continuity between blower motor harness connector and ground.

Blower motor		—	Continuity
Connector	Terminal		
M98	3	Ground	Existed

Is the inspection result normal?

YES >> GO TO 5.
NO >> Repair harness or connector.

5. CHECK BLOWER MOTOR CIRCUIT CONTINUITY

1. Disconnect A/C auto amp. connector.
2. Check continuity between blower motor harness connector and A/C auto amp. harness connector.

Blower motor		A/C auto amp.		Continuity
Connector	Terminal	Connector	Terminal	
M98	2	M50	32	Existed

Is the inspection result normal?

YES >> GO TO 6.
NO >> Repair harness or connector.

6. CHECK A/C AUTO AMP. OUTPUT SIGNAL

1. Reconnect blower motor connector and A/C auto amp. connector.
2. Turn ignition switch ON.
3. Set MODE switch to the VENT position.
4. Check the output waveform between blower motor harness connector and ground using an oscilloscope, while varying the fan speed from 1 to 7.

Blower fan speed (Manual) VENT mode	1st	2nd	3rd	4th	5th	6th	7th
Blower motor connector M 98 terminal No. 2 (Oscilloscope)	T1 Approx. 1.6 ms	T2 Approx. 1.6 ms	T3 Approx. 1.6 ms	T4 Approx. 1.6 ms	T5 Approx. 1.6 ms	T6 Approx. 1.6 ms	T7 Approx. 1.6 ms
Duty ratio	Approx. 25%	Approx. 33%	Approx. 41%	Approx. 51%	Approx. 61%	Approx. 69%	Approx. 75%

NOTE: Duty ratio = $\frac{Tx}{\text{Approx. 1.6 ms}}$ x 100 (%)

JPIIA1025GB

Is the inspection result normal?

YES >> Replace the blower motor.
NO >> Replace the A/C auto amp.

7. CHECK POWER VOLTAGE OF BLOWER RELAY

1. Turn the ignition switch OFF.
2. Remove the blower relay. Refer to PG-101, "Fuse, Connector and Terminal Arrangement".
3. Turn the ignition switch ON.
4. Check the voltage between blower relay fuse block side terminal and ground. Refer to PG-101, "Fuse, Connector and Terminal Arrangement" for relay terminal assignment.

(+)	(–)	Voltage
Blower relay	—	
1	Ground	Battery voltage
3		

Is the inspection result normal?

YES >> GO TO 8.
NO >> Inspection the power supply circuit. Refer to PG-55, "Wiring Diagram - IGNITION POWER SUPPLY -".

8. CHECK BLOWER RELAY

1. Turn the ignition switch OFF.
2. Install the blower relay. Refer to PG-101, "Fuse, Connector and Terminal Arrangement".
3. Turn the ignition switch ON.
4. Check the operating sound of blower relay.

Is the inspection result normal?

YES >> GO TO 9.
NO >> Replace the blower relay.

9. CHECK FUSE

Check 15A fuses (Nos. 21 and 22).

NOTE:

Refer to PG-101, "Fuse, Connector and Terminal Arrangement" for fuse location.

Is the inspection result normal?

YES >> Repair the harnesses or connectors.
NO >> Replace the fuse after repairing the applicable circuit.

Component Inspection

INFOID:0000000003884775

1. CHECK BLOWER MOTOR

1. Remove the blower motor. Refer to VTL-90, "Exploded View".
2. Check that the blower motor rotates smoothly.

Is the inspection result normal?

YES >> END.
NO >> Replace blower motor.

MAGNET CLUTCH

Description

INFOID:0000000003884776

The magnet clutch drives the compressor, by an IPDM E/R signal.

Component Function Check

INFOID:0000000003884777

1.FUNCTION INSPECTION

1. Press AUTO switch.
2. “AUTO” is indicated on the display.
3. Check that the indicator of the A/C switch turns on. Check visually and by sound that the compressor is operating (the discharge air temperature or fan speed varies depending on the ambient temperature, in-vehicle temperature, and temperature setting).
4. Press the A/C switch.
5. Check that the indicator of the A/C switch turns OFF. Check visually and by sound that the compressor stops.

Does it operate normally?

YES >> INSPECTION END
NO >> Perform trouble diagnosis for the compressor. Refer to HAC-197, "Diagnosis Procedure".

Diagnosis Procedure

INFOID:0000000003884778

1.INSPECTION IN AUTO ACTIVE TEST MODE

Perform “AUTO ACTIVE TEST”. Refer to PCS-11, "Diagnosis Description".

Does it operate normally?

YES >> GO TO 5.
NO >> GO TO 2.

2.CHECK MAGNET CLUTCH

1. Turn the ignition switch OFF.
2. Disconnect the magnet clutch connector.
3. Directly apply the battery voltage to the magnet clutch. Check for operation visually and by sound.

Does it operate normally?

YES >> GO TO 3.
NO >> Replace the compressor.

3.CHECK MAGNET CLUTCH CIRCUIT CONTINUITY

1. Turn the ignition switch OFF.
2. Disconnect IPDM E/R connector.
3. Check continuity between magnet clutch harness connector and IPDM E/R harness connector.

IPDM E/R		Compressor		Continuity
Connector	Terminal	Connector	Terminal	
F12	48	F18	1	Existed

Is the inspection result normal?

YES >> GO TO 4.
NO >> Repair harness or connector.

4.CHECK FUSE

Check 10A fuse (No. 49).

NOTE:
Refer to PG-101, "Fuse, Connector and Terminal Arrangement" for fuse location.

Is the inspection result normal?

YES >> Replace IPDM E/R.
NO >> Replace the fuse after repairing the applicable circuit.

5. CHECK WITH SELF-DIAGNOSIS FUNCTION OF CONSULT-III

1. Using CONSULT-III, perform “SELF-DIAGNOSIS RESULTS” of HVAC.
2. Check if any DTC is displayed in the self-diagnosis results.

NOTE:
If DTC is displayed along with DTC U1000 or U1010, first diagnose the DTC U1000 or U1010. Refer to HAC-164, "DTC Logic" or HAC-165, "DTC Logic".

Is any DTC displayed?

YES >> Perform the diagnosis that is applicable to the sensor and actuator. Refer to HAC-212, "WITHOUT INTELLIGENT AIR CONDITIONER SYSTEM : DTC Index" (WITHOUT INTELLIGENT AIR CONDITIONER SYSTEM) or HAC-224, "WITH INTELLIGENT AIR CONDITIONER SYSTEM : DTC Index" (WITH INTELLIGENT AIR CONDITIONER SYSTEM).
NO >> GO TO 6.

6. CHECK A/C AUTO AMP. INPUT SIGNAL

Using CONSULT-III, check “On/Off” of “AIR COND SIG” and “HEATER FAN SW” in “DATA MONITOR” of HVAC. Refer to HAC-156, "WITHOUT INTELLIGENT AIR CONDITIONER SYSTEM : CONSULT-III Function" (WITHOUT INTELLIGENT AIR CONDITIONER SYSTEM) or HAC-159, "WITH INTELLIGENT AIR CONDITIONER SYSTEM : CONSULT-III Function" (WITH INTELLIGENT AIR CONDITIONER SYSTEM).

A/C SWITCH ON	**: AIR COND SIG On**
A/C SWITCH OFF	**: AIR COND SIG Off**
FAN CONTROL DIAL ON	**: HEATER FAN SW On**
FAN CONTROL DIAL OFF	**: HEATER FAN SW Off**

Is the inspection result normal?

YES >> GO TO 7.
NO >> Replace A/C auto amp.

7. CHECK REFRIGERANT PRESSURE SENSOR

Check refrigerant pressure sensor. Refer to EC-348, "Diagnosis Procedure".

Is the inspection result normal?

YES >> INSPECTION END
NO >> Repair or replace malfunctioning parts.

IONIZER

WITH INTELLIGENT AIR CONDITIONER SYSTEM

WITH INTELLIGENT AIR CONDITIONER SYSTEM : Description

INFOID:0000000003884785

Ionizer (1) is attached to the ventilator dust (RH) (2).
Ionizer has two types of operation mode and emits ions into the air
- Clean mode: Emits positive and negative ions at the same ratio.
- Ion control mode: Emits more negative ions.

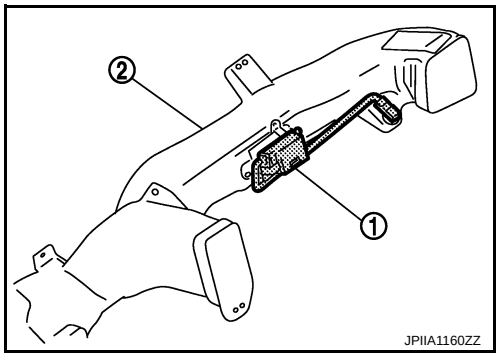

WITH INTELLIGENT AIR CONDITIONER SYSTEM : Component Function Check

INFOID:0000000003884786

1. CHECK IONIZER OPERATION SOUND

1. Turn ignition switch ON.
2. Press AUTO switch.
3. Ion indicator (blue) is shown on the display.
4. Check the ionizer operation sound (whirring sound) in the duct by putting an ear to the center ventilator grille (RH) outlet.

Is the inspection result normal?

YES >> END.
NO >> Go to Diagnosis Procedure. Refer to HAC-199, "WITH INTELLIGENT AIR CONDITIONER SYSTEM : Diagnosis Procedure".

WITH INTELLIGENT AIR CONDITIONER SYSTEM : Diagnosis Procedure

INFOID:0000000003884787

1. CHECK POWER SUPPLY FOR IONIZER

1. Turn ignition switch OFF.
2. Disconnect ionizer connector.
3. Turn ignition switch ON.
4. Check voltage between ionizer harness connector and ground.

Ionizer			Voltage (Approx.)
(+)		(–)	
Connector	Terminal	Ground	
M151	1		Battery voltage

Is inspection result normal?

YES >> GO TO 2.
NO >> Check 10A fuse (No. 3, located in the fuse block). Refer to PG-101, "Fuse, Connector and Terminal Arrangement".
- If fuse is OK, check harness for open circuit. Repair or replace if necessary.
- If fuse is NG, replace fuse and check for short circuit. Repair or replace if necessary.

2. CHECK ION ON/OFF OUTPUT SIGNAL

1. Turn fan control dial clockwise.
2. Check voltage between ionizer harness connector and ground.

Ionizer			Voltage (Approx.)
(+)		(–)	
Connector	Terminal	Ground	
M151	4		0 V

Is inspection result normal?

YES >> GO TO 3.
NO >> GO TO 4.

3. CHECK MODE CHANGE OUTPUT SIGNAL

Check voltage between ionizer harness connector and ground.

Ionizer			Condition	Voltage (Approx.)
(+)		(–)		
Connector	Terminal	Ground		
M151	2		“CLEAN” ON	12 V
			“ION” ON	0 V

Is inspection result normal?

YES >> GO TO 5.
NO >> GO TO 6.

4. CHECK CIRCUIT CONTINUITY BETWEEN AUTO. AMP AND IONIZER

1. Turn ignition switch OFF.
2. Disconnect A/C auto amp. connector.
3. Check continuity between A/C auto amp. harness connector and ionizer harness connector.

A/C auto amp.		Ionizer		Continuity
Connector	Terminal	Connector	Terminal	
M50	12	M151	4	Existed

Is the inspection result normal?

YES >> Replace A/C auto amp.
NO >> Repair harnesses or connectors.

5. CHECK CIRCUIT CONTINUITY BETWEEN IONIZER AND GROUND

1. Turn ignition switch OFF.
2. Check continuity between ionizer harness connector and ground.

Ionizer		—	Continuity
Connector	Terminal		
M151	3	Ground	Existed

Is inspection result normal?

YES >> Replace ionizer.
NO >> Repair harnesses or connectors.

6. CHECK CIRCUIT CONTINUITY BETWEEN AUTO AMP. AND IONIZER

1. Turn ignition switch OFF.
2. Disconnect auto amp. connector.
3. Check continuity between A/C auto amp. harness connector and ionizer harness connector.

A/C auto amp.		Ionizer		Continuity
Connector	Terminal	Connector	Terminal	
M50	28	M151	2	Existed

Is inspection result normal?

YES >> Replace A/C auto amp.
NO >> Repair harnesses or connectors.

ECU DIAGNOSIS

A/C AUTO AMP.

WITHOUT INTELLIGENT AIR CONDITIONER SYSTEM

WITHOUT INTELLIGENT AIR CONDITIONER SYSTEM : Reference Value

INFOID:0000000003884790

VALUES ON THE DIAGNOSIS TOOL

CONSULT-III MONITOR ITEM

Monitor item	Condition		Value/Status
COMP REQ SIG	Engine: Run at idle after warming up	A/C switch: ON (Compressor operation status)	On
		A/C switch: OFF	Off
FAN REQ SIG	Engine: Run at idle after warming up	Blower fan: ON	On
		Blower fan: OFF	Off
AMB TEMP SEN	Ignition switch ON	—	–30 - 55°C (–22 - 131°F)
IN-VEH TEMP	Ignition switch ON	—	–30 - 55°C (–22 - 131°F)
INT TEMP SEN	Ignition switch ON	—	–30 - 55°C (–22 - 131°F)
SUNLOAD SEN	Ignition switch ON	—	0 - 1045 W/m^2 (0 - 900 kcal/m^2·h)
AMB SEN CAL	Ignition switch ON	—	–30 - 55°C (–22 - 131°F)
IN-VEH CAL	Ignition switch ON	—	–30 - 55°C (–22 - 131°F)
INT TEMP CAL	Ignition switch ON	—	–30 - 55°C (–22 - 131°F)
SUNL SEN CAL	Ignition switch ON	—	0 - 1045 W/m^2 (0 - 900 kcal/m^2·h)
FAN DUTY	Engine: Run at idle after warming up	Blower fan: ON	21 - 91%
		Blower fan: OFF	0%
XM	Ignition switch ON	—	–100 - 150
ENG COOL TEMP	Ignition switch ON	—	Values according to coolant temperature
VEHICLE SPEED	Driving	—	Equivalent to speedometer reading

TERMINAL LAYOUT

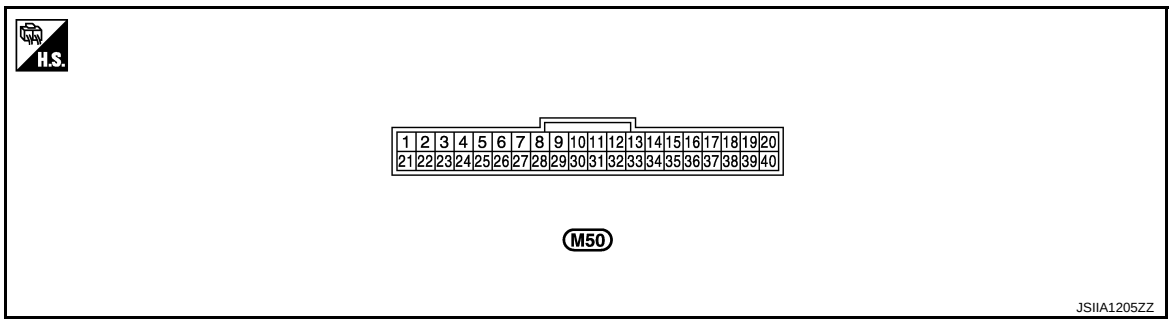

PHYSICAL VALUES

Terminal No. (Wire color)		Description		Condition	Value (Approx.)
+	–	Signal name	Input/ Output		
10 (L/R)	Ground	LAN signal	Input/ Output	—	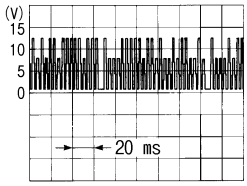 SJIA1453J
11 (L/W)	Ground	Power supply for each door motor	Input	Ignition switch ON	Battery voltage
15 (O)	Ground	Sunload sensor signal	Input	—	—
16 (R/G)	Ground	Intake sensor signal	Input	—	—
17 (V/W)	Ground	ACC Power supply	—	Ignition switch ACC	Battery voltage
19 (B)	Ground	Ground	—	Ignition switch ON	0 V
20 (G/W)	Ground	IGN Power supply	—	Ignition switch ON	Battery voltage
32 (L/Y)	Ground	Blower motor control signal	Output	• Ignition switch ON • Blower speed: 1st speed (manual)	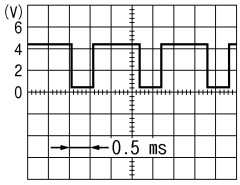 JSIIA0096ZZ
34 (P)	Ground	A/C auto amp. connection recognition signal	Output	Ignition switch ON	5V
35 (O/B)	Ground	Ambient sensor signal	Input	—	—
36 (LG)	Ground	In-vehicle sensor signal	Input	—	—
37 (B/Y)	Ground	Sensor ground	—	Ignition switch ON	0 V
39 (B)	Ground	Ground	—	Ignition switch ON	0 V
40 (Y/R)	Ground	BATT Power supply	—	Ignition switch OFF	Battery voltage

WITHOUT INTELLIGENT AIR CONDITIONER SYSTEM : Wiring Diagram - AIR CON-

DITIONER CONTROL SYSTEM -

INFOID:0000000003941765

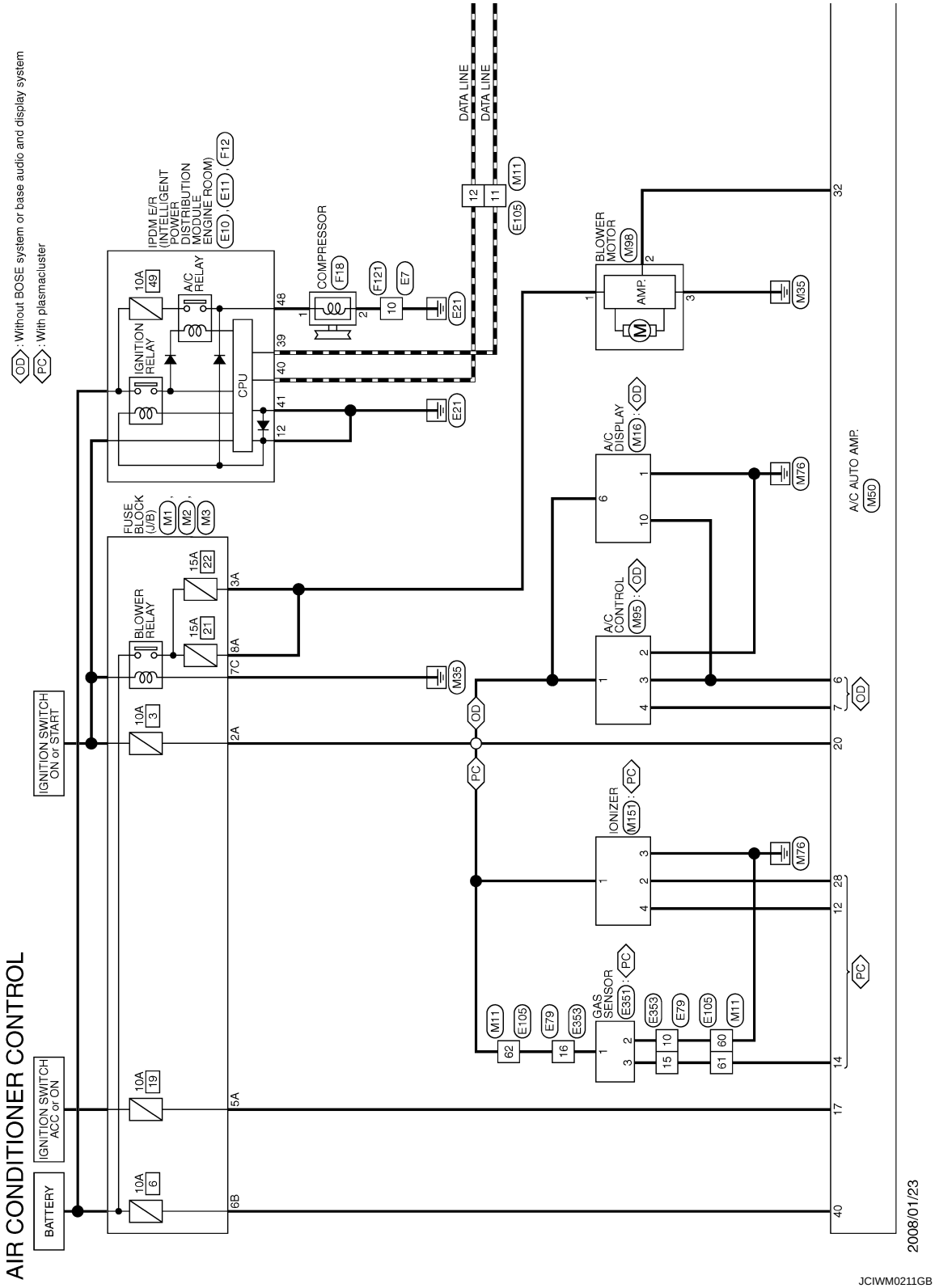

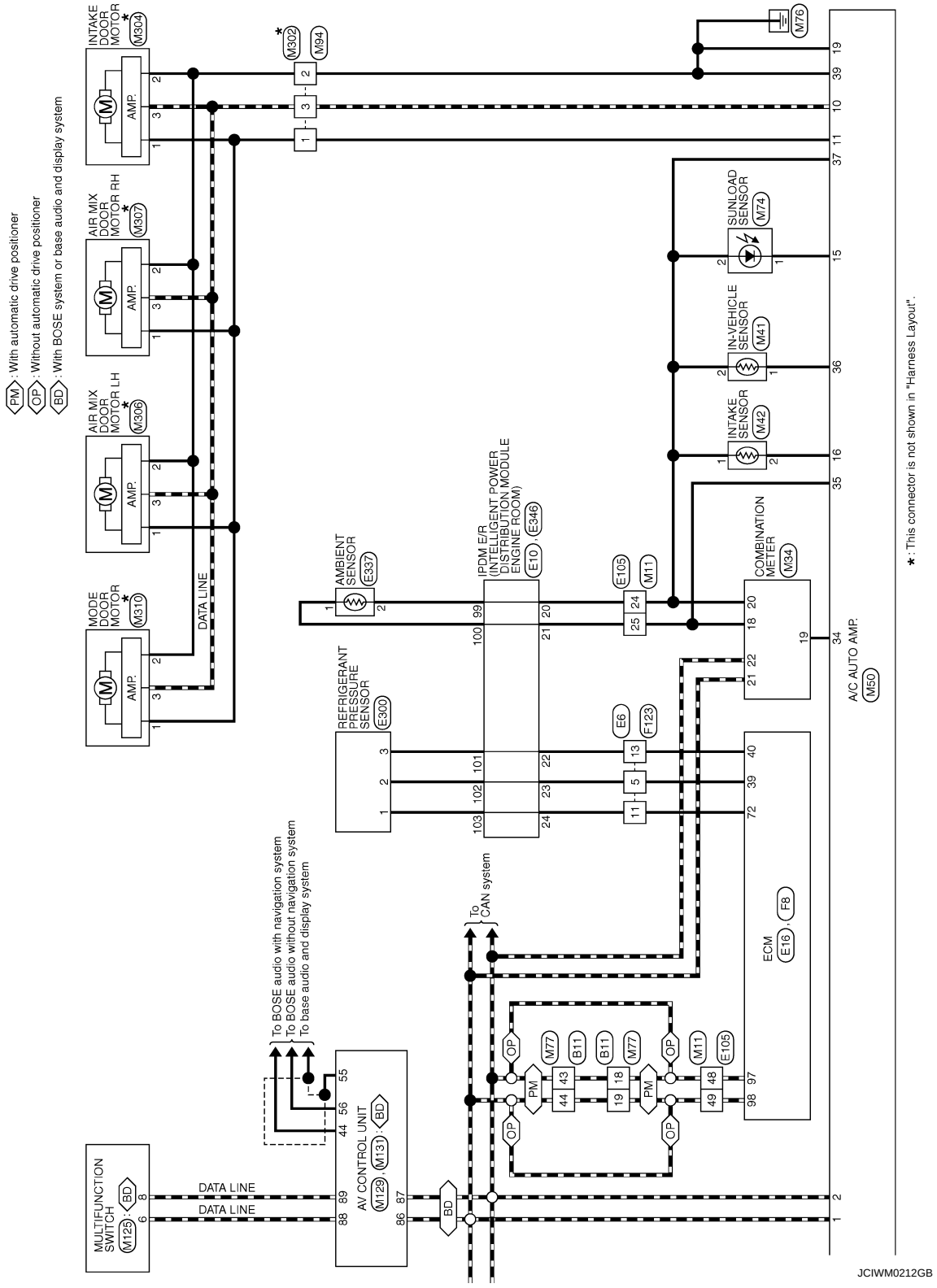
PM : With automatic drive positioner
OP : Without automatic drive positioner
BD : With BOSE system or base audio and display system
INTAKE DOOR MOTOR M304
AIR MIX DOOR MOTOR RH M307
AIR MIX DOOR MOTOR LH M306
MODE DOOR MOTOR M310
AMP.
DATA LINE
M302
M94
M76
SUNLOAD SENSOR M74
IN-VEHICLE SENSOR M41
INTAKE SENSOR M42
AMBIENT SENSOR E337
IPDM E/R (INTELLIGENT POWER DISTRIBUTION MODULE ENGINE ROOM) E10, E346
E105
M11
COMBINATION METER M34
A/C AUTO AMP. M50
REFRIGERANT PRESSURE SENSOR E300
E6
F123
ECM E16, F8
To CAN system
To BOSE audio with navigation system
To BOSE audio without navigation system
To base audio and display system
AV CONTROL UNIT M129, M131 : BD
MULTIFUNCTION SWITCH M125 : BD
DATA LINE
DATA LINE
BD
OP
PM
M77
B11
B11
M77
M11
E105
* : This connector is not shown in "Harness Layout".
JCIWM0212GB

AIR CONDITIONER CONTROL

Connector No.	B11
Connector Name	WIRE TO WIRE
Connector Type	TH80MW-CS19

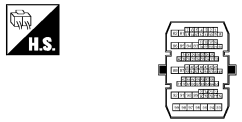

Terminal No.	Color of Wire	Signal Name [Specification]
18	P	–
19	L	–
43	P	–
44	L	–

Connector No.	E6
Connector Name	WIRE TO WIRE
Connector Type	TK16MGY-1V

Terminal No.	Color of Wire	Signal Name [Specification]
5	GR	–
11	G	–
13	SB	–

Connector No.	E7
Connector Name	WIRE TO WIRE
Connector Type	NS10MW-CS

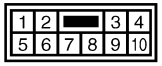

Terminal No.	Color of Wire	Signal Name [Specification]
10	B/W	–

Connector No.	E10
Connector Name	IPDM E/R (INTELLIGENT POWER DISTRIBUTION MODULE ENGINE ROOM)
Connector Type	TH20FW-CS12-M4-1V

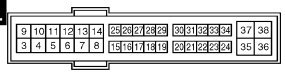

Terminal No.	Color of Wire	Signal Name [Specification]
12	B/W	–
20	B	–
21	O	–
22	SB	–
23	GR	–
24	G	–

Connector No.	E11
Connector Name	IPDM E/R (INTELLIGENT POWER DISTRIBUTION MODULE ENGINE ROOM)
Connector Type	TH08FW-NH

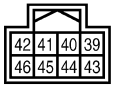

Terminal No.	Color of Wire	Signal Name [Specification]
39	P	–
40	L	–
41	B	–

Connector No.	E16
Connector Name	ECM
Connector Type	RH24FB-RZ8-L-LH

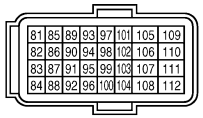

Terminal No.	Color of Wire	Signal Name [Specification]
97	P	VEHCAN-L
98	L	VEHCAN-H

Connector No.	E79
Connector Name	WIRE TO WIRE
Connector Type	TK20MW

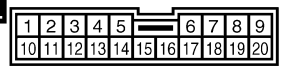

Terminal No.	Color of Wire	Signal Name [Specification]
10	LG	–
15	L	–
16	BR	–

Connector No.	E105
Connector Name	WIRE TO WIRE
Connector Type	TH70MW-CS10-M3

Terminal No.	Color of Wire	Signal Name [Specification]
11	P	–
12	L	–
24	B	–
25	O	–
48	P	–
49	L	–
60	LG	–
61	L	–
62	BR	–

JCIWM0213GB

AIR CONDITIONER CONTROL

Connector No.	E300
Connector Name	REFRIGERANT PRESSURE SENSOR
Connector Type	RK03FB

Terminal No.	Color of Wire	Signal Name [Specification]
1	P	–
2	R	–
3	GR	–

Connector No.	E337
Connector Name	AMBIENT SENSOR
Connector Type	RS02FB

Terminal No.	Color of Wire	Signal Name [Specification]
1	SB	–
2	W	–

Connector No.	E346
Connector Name	IPDM E/R (INTELLIGENT POWER DISTRIBUTION MODULE ENGINE ROOM)
Connector Type	TH16FW-NH

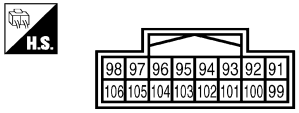

Terminal No.	Color of Wire	Signal Name [Specification]
99	W	–
100	SB	–
101	GR	–
102	R	–
103	P	–

Connector No.	E351
Connector Name	GAS SENSOR
Connector Type	RH03FB

Terminal No.	Color of Wire	Signal Name [Specification]
1	O	–
2	BR	–
3	G	–

Connector No.	E353
Connector Name	WIRE TO WIRE
Connector Type	TK20FW

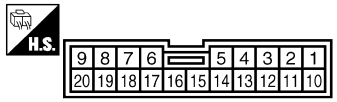

Terminal No.	Color of Wire	Signal Name [Specification]
10	BR	–
15	G	–
16	O	–

Connector No.	F8
Connector Name	ECM
Connector Type	RH40FBR-RZ8-L-LH

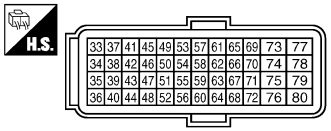

Terminal No.	Color of Wire	Signal Name [Specification]
39	R	PDPRES
40	G	GNDA-PDPRES
72	BR/W	AVCC2-PDPRES

Connector No.	F12
Connector Name	IPDM E/R (INTELLIGENT POWER DISTRIBUTION MODULE ENGINE ROOM)
Connector Type	TH20FW-CS12-M4

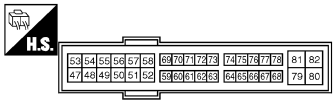

Terminal No.	Color of Wire	Signal Name [Specification]
48	Y/R	–

Connector No.	F18
Connector Name	COMPRESSOR
Connector Type	RH02FB

Terminal No.	Color of Wire	Signal Name [Specification]
1	W	–
2	B	–

JCIWM0214GB

AIR CONDITIONER CONTROL

Connector No.	F121
Connector Name	WIRE TO WIRE
Connector Type	NS10FW-CS

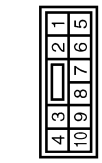

Terminal No.	Color of Wire	Signal Name [Specification]
10	B	–

Connector No.	F123
Connector Name	WIRE TO WIRE
Connector Type	TK16FGY-1V

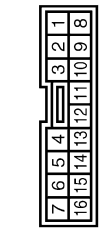

Terminal No.	Color of Wire	Signal Name [Specification]
5	R	–
11	BR/W	–
13	G	–

Connector No.	M1
Connector Name	FUSE BLOCK (J/B)
Connector Type	NS06FW-M2

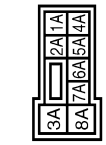

Terminal No.	Color of Wire	Signal Name [Specification]
2A	G/O	–
3A	W/L	–
5A	V/O	–
8A	W/L	–

Connector No.	M2
Connector Name	FUSE BLOCK (J/B)
Connector Type	NS10FW-CS

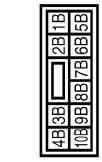

Terminal No.	Color of Wire	Signal Name [Specification]
6B	Y/R	–

Connector No.	M3
Connector Name	FUSE BLOCK (J/B)
Connector Type	NS12FW-CS

Terminal No.	Color of Wire	Signal Name [Specification]
7C	B/P	–

Connector No.	M11
Connector Name	WIRE TO WIRE
Connector Type	TH70FW-CS10-M3

Terminal No.	Color of Wire	Signal Name [Specification]
11	P	–
12	L	–
24	B/Y	–
25	O/B	–
48	P	–
49	L	–
60	B	–
61	G	–
62	G	–

Connector No.	M16
Connector Name	A/C DISPLAY
Connector Type	TH10FB-NH

Terminal No.	Color of Wire	Signal Name [Specification]
1	B	GND
6	G	IGN
10	L	RX(AMP>DISP)

Connector No.	M34
Connector Name	COMBINATION METER
Connector Type	TH40FW-NH

Terminal No.	Color of Wire	Signal Name [Specification]
18	O/B	AMBIENT SENSOR SIGNAL
19	P	A/C AUTO AMP. CONNECTION RECOGNITION SIGNAL
20	B/Y	AMBIENT SENSOR GROUND
21	L	CAN-H
22	P	CAN-L

JCIWM0215GB

AIR CONDITIONER CONTROL

Connector No.	M41
Connector Name	IN-VEHICLE SENSOR
Connector Type	A02FW

Terminal No.	Color of Wire	Signal Name [Specification]
1	LG	–
2	B/Y	–

Connector No.	M42
Connector Name	INTAKE SENSOR
Connector Type	C02FW

Terminal No.	Color of Wire	Signal Name [Specification]
1	B/Y	–
2	R/G	–

Connector No.	M50
Connector Name	A/C AUTO AMP.
Connector Type	SAB40FW

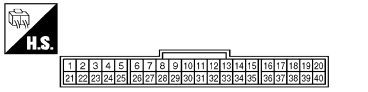

Terminal No.	Color of Wire	Signal Name [Specification]
1	L	CAN-H
2	P	CAN-L
6	L	TX(AMP>SW&DISP)
7	P	RX(SW>AMP)
10	L/R	LAN SIGNAL
11	L/W	POWER SUPPLY FOR EACH DOOR MOTOR
12	O	ION ON/OFF SIGNAL
14	G	GAS SENSOR SIGNAL
15	O	SUNLOAD SENSOR SIGNAL
16	R/G	INTAKE SENSOR SIGNAL
17	V/W	ACC POWER SUPPLY
19	B	GROUND
20	G/W	IGN POWER SUPPLY
28	G/Y	ION CONTROL MODE OUTPUT SIGNAL
32	L/Y	BLOWER MOTOR CONTROL SIGNAL
34	P	A/C AUTO AMP. CONNECTION RECOGNITION SIGNAL
35	O/B	AMBIENT SENSOR SIGNAL
36	LG	IN-VEHICLE SENSOR SIGNAL
37	B/Y	SENSOR GND
39	B	GROUND
40	Y/R	BAT POWER SUPPLY

Connector No.	M74
Connector Name	SUNLOAD SENSOR
Connector Type	K02FB

Terminal No.	Color of Wire	Signal Name [Specification]
1	O	–
2	B/Y	–

Connector No.	M77
Connector Name	WIRE TO WIRE
Connector Type	TH80FW-CS19

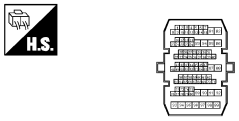

Terminal No.	Color of Wire	Signal Name [Specification]
18	P	–
19	L	–
43	P	–
44	L	–

Connector No.	M94
Connector Name	WIRE TO WIRE
Connector Type	A03MW

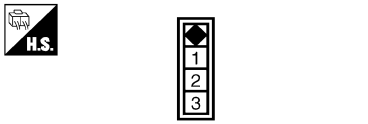

Terminal No.	Color of Wire	Signal Name [Specification]
1	L/W	–
2	B	–
3	L/R	–

Connector No.	M95
Connector Name	A/C CONTROL
Connector Type	TH12FW-NH

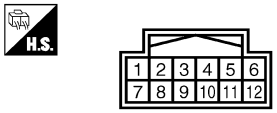

Terminal No.	Color of Wire	Signal Name [Specification]
1	G/W	IGN
2	B	GND
3	L	RX(AMP>SW)
4	P	TX(SW>AMP)

JCIWM0216GB

AIR CONDITIONER CONTROL

Connector No.	M98
Connector Name	BLOWER MOTOR
Connector Type	NS03FW-M3

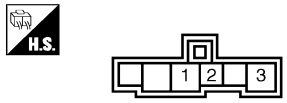

Terminal No.	Color of Wire	Signal Name [Specification]
1	W/L	–
2	L/Y	–
3	B	–

Connector No.	M125
Connector Name	MULTIFUNCTION SWITCH
Connector Type	TH16FW-NH

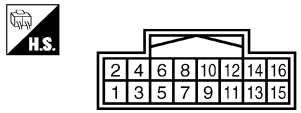

Terminal No.	Color of Wire	Signal Name [Specification]
6	W	M-CAN H
8	B	M-CAN L

Connector No.	M129
Connector Name	AV CONTROL UNIT
Connector Type	TH24FW-NH

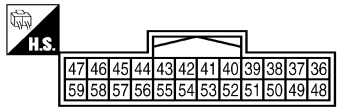

Terminal No.	Color of Wire	Signal Name [Specification]
44	G	COMM (DISP->CONT)
55	SHIELD	SHIELD
56	R	COMM (CONT->DISP)

Connector No.	M131
Connector Name	AV CONTROL UNIT
Connector Type	TH32FW-NH

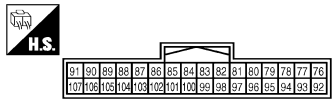

Terminal No.	Color of Wire	Signal Name [Specification]
86	L	CAN-H
87	P	CAN-L
88	W	AV COMM (H)
89	B	AV COMM (L)

Connector No.	M151
Connector Name	IONIZER
Connector Type	TH04FW-NH

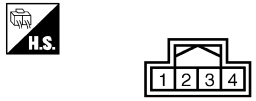

Terminal No.	Color of Wire	Signal Name [Specification]
1	G/W	IGN
2	G/Y	ION-MODE
3	B	GND
4	O	ION-ON/OFF

Connector No.	M302
Connector Name	WIRE TO WIRE
Connector Type	A03FW

Terminal No.	Color of Wire	Signal Name [Specification]
1	–	–
2	–	–
3	–	–

Connector No.	M304
Connector Name	INTAKE DOOR MOTOR
Connector Type	A03FW

Terminal No.	Color of Wire	Signal Name [Specification]
1	–	–
2	–	–
3	–	–

Connector No.	M306
Connector Name	AIR MIX DOOR MOTOR LH
Connector Type	A03FW

Terminal No.	Color of Wire	Signal Name [Specification]
1	–	–
2	–	–
3	–	–

JCIWM0217GB

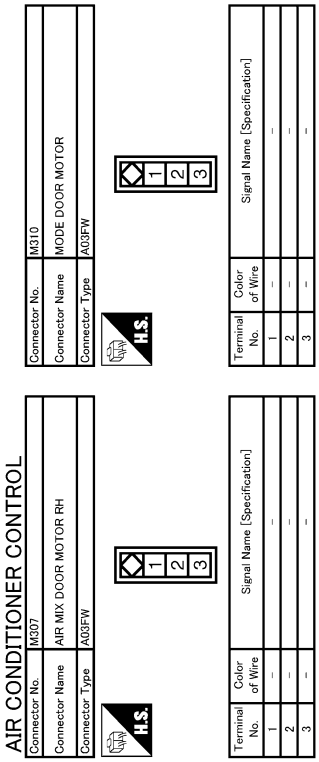

JCIWM0218GB

WITHOUT INTELLIGENT AIR CONDITIONER SYSTEM : Fail-Safe

INFOID:0000000003940036

FAIL-SAFE FUNCTION

If a communication error exists between the A/C auto amp., and the AV control unit and preset switch for 30 seconds or longer, air conditioner is controlled under the following conditions:

Compressor	**: ON**
Air outlet	**: AUTO**
Air inlet	**: FRE (Fresh)**
Blower fan speed	**: AUTO**
Set temperature	**: Setting before communication error occurs**

WITHOUT INTELLIGENT AIR CONDITIONER SYSTEM : DTC Inspection Priority Chart

INFOID:0000000003884792

If some DTCs are displayed at the same time, perform inspections one by one based on the following priority chart.

Priority	Detected items (DTC)
1	• U1000: CAN COMM CIRCUIT • U1010: CONTROL UNIT (CAN)
2	• B257B: AMB TEMP SEN (SHORT) • B257C: AMB TEMP SEN (OPEN) • B2578: IN CAR SENSOR (OUT OF RANGE [LOW]) • B2579: IN CAR SENSOR (OUT OF RANGE [HI]) • B2581: EVAP TEMP SEN (SHORT) • B2582: EVAP TEMP SEN (OPEN) • B2630: SUNLOAD SEN (SHORT) • B2631: SUNLOAD SEN (OPEN) • B2632: DR AIRMIX ACTR (SHORT) • B2633: DR AIRMIX ACTR (OPEN) • B2634: PASS AIRMIX ACTR (SHORT) • B2635: PASS AIRMIX ACTR (OPEN) • B2636: DR VENT DOOR FAIL • B2637: DR B/L DOOR FAIL • B2638: DR D/F1 DOOR FAIL • B2639: DR DEF DOOR FAIL • B263D: FRE DOOR FAIL • B263E: 20P FRE DOOR FAIL • B263F: REC DOOR FAIL • B2654: D/F2 DOOR FAIL • B2655: B/L2 DOOR FAIL • B2656: BTC FRE DOOR FAIL

WITHOUT INTELLIGENT AIR CONDITIONER SYSTEM : DTC Index

INFOID:0000000003884793

DTC	Items (CONSULT-III screen terms)	Reference
U1000	CAN COMM CIRCUIT	HAC-164, "DTC Logic"
U1010	CONTROL UNIT (CAN)	HAC-165, "DTC Logic"
B257B	AMB TEMP SEN (SHORT)	HAC-166, "DTC Logic"
B257C	AMB TEMP SEN (OPEN)	HAC-166, "DTC Logic"
B2578	IN CAR SENSOR (OUT OF RANGE [LOW])	HAC-169, "DTC Logic"
B2579	IN CAR SENSOR (OUT OF RANGE [HI])	HAC-169, "DTC Logic"
B2581	EVAP TEMP SEN (SHORT)	HAC-172, "DTC Logic"
B2582	EVAP TEMP SEN (OPEN)	HAC-172, "DTC Logic"
B2630*	SUNLOAD SEN (SHORT)	HAC-178, "DTC Logic"
B2631*	SUNLOAD SEN (OPEN)	HAC-178, "DTC Logic"
B2632	DR AIRMIX ACTR (SHORT)	HAC-181, "DTC Logic"
B2633	DR AIRMIX ACTR (OPEN)	HAC-181, "DTC Logic"

DTC	Items (CONSULT-III screen terms)	Reference
B2634	PASS AIRMIX ACTR (SHORT)	HAC-183, "DTC Logic"
B2635	PASS AIRMIX ACTR (OPEN)	HAC-183, "DTC Logic"
B2636	DR VENT DOOR FAIL	HAC-185, "DTC Logic"
B2637	DR B/L DOOR FAIL	HAC-185, "DTC Logic"
B2638	DR D/F1 DOOR FAIL	HAC-185, "DTC Logic"
B2639	DR DEF DOOR FAIL	HAC-185, "DTC Logic"
B263D	FRE DOOR FAIL	HAC-188, "DTC Logic"
B263E	20P FRE DOOR FAIL	HAC-188, "DTC Logic"
B263F	REC DOOR FAIL	HAC-188, "DTC Logic"
B2654	D/F2 DOOR FAIL	HAC-185, "DTC Logic"
B2655	B/L2 DOOR FAIL	HAC-185, "DTC Logic"
B2656	BTC FRE DOOR FAIL	HAC-188, "DTC Logic"

*: Perform self-diagnosis under sunshine. When performing indoors, aim a light (more than 60 W) at sunload sensor, otherwise self-diagnosis indicates even though the sunload sensor is functioning normally.

WITH INTELLIGENT AIR CONDITIONER SYSTEM

WITH INTELLIGENT AIR CONDITIONER SYSTEM : Reference Value

INFOID:0000000003884794

VALUES ON THE DIAGNOSIS TOOL

CONSULT-III MONITOR ITEM

Monitor item	Condition		Value/Status
COMP REQ SIG	Engine: Run at idle after warming up	A/C switch: ON (Compressor operation status)	On
		A/C switch: OFF	Off
FAN REQ SIG	Engine: Run at idle after warming up	Blower fan: ON	On
		Blower fan: OFF	Off
AMB TEMP SEN	Ignition switch ON	—	–30 - 55°C (–22 - 131°F)
IN-VEH TEMP	Ignition switch ON	—	–30 - 55°C (–22 - 131°F)
INT TEMP SEN	Ignition switch ON	—	–30 - 55°C (–22 - 131°F)
SUNLOAD SEN	Ignition switch ON	—	0 - 1045 W/m^2 (0 - 900 kcal/m^2·h)
AMB SEN CAL	Ignition switch ON	—	–30 - 55°C (–22 - 131°F)
IN-VEH CAL	Ignition switch ON	—	–30 - 55°C (–22 - 131°F)
INT TEMP CAL	Ignition switch ON	—	–30 - 55°C (–22 - 131°F)
SUNL SEN CAL	Ignition switch ON	—	0 - 1045 W/m^2 (0 - 900 kcal/m^2·h)
FAN DUTY	Engine: Run at idle after warming up	Blower fan: ON	21 - 91%
		Blower fan: OFF	0%
XM	Ignition switch ON	—	–100 - 150
ENG COOL TEMP	Ignition switch ON	—	Values according to coolant temperature
VEHICLE SPEED	Driving	—	Equivalent to speedometer reading

TERMINAL LAYOUT

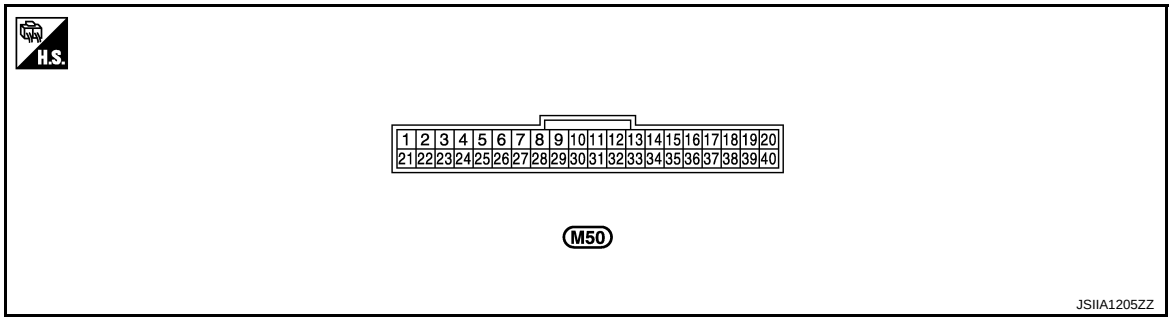

PHYSICAL VALUES

Terminal No. (Wire color)		Description		Condition	Value (Approx.)
+	–	Signal name	Input/ Output		
10 (L/R)	Ground	LAN signal	Input/ Output	—	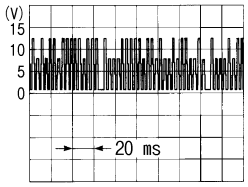 SJIA1453J
11 (L/W)	Ground	Power supply for each door motor	Input	Ignition switch ON	Battery voltage
12 (O)	Ground	ION ON/OFF signal	Output	Blower fan ON	0 V
				Blower fan OFF	12 V
14 (G)	Ground	Gas sensor signal	Input	**NOTE:** The signal is different by measurement environment of a vehicle	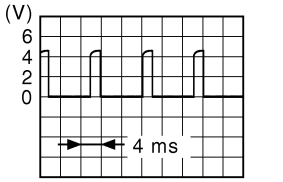 ZJIA1163J
15 (O)	Ground	Sunload sensor signal	Input	—	—
16 (R/G)	Ground	Intake sensor signal	Input	—	—
17 (V/W)	Ground	ACC Power supply	—	Ignition switch ACC	Battery voltage
19 (B)	Ground	Ground	—	Ignition switch ON	0 V
20 (G/W)	Ground	IGN Power supply	—	Ignition switch ON	Battery voltage
28 (G/Y)	Ground	Ion control mode output signal	Output	Clean mode	12 V
				Ion control mode	0 V

Terminal No. (Wire color)		Description		Condition	Value (Approx.)
+	–	Signal name	Input/ Output		
32 (L/Y)	Ground	Blower motor control signal	Output	• Ignition switch ON • Blower speed: 1st speed (manual)	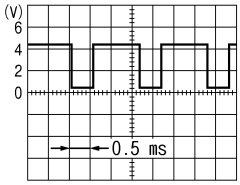 JSIIA0096ZZ
34 (P)	Ground	A/C auto amp. connection recognition signal	Output	Ignition switch ON	5V
35 (O/B)	Ground	Ambient sensor signal	Input	—	—
36 (LG)	Ground	In-vehicle sensor signal	Input	—	—
37 (B/Y)	Ground	Sensor ground	—	Ignition switch ON	0 V
39 (B)	Ground	Ground	—	Ignition switch ON	0 V
40 (Y/R)	Ground	BATT Power supply	—	Ignition switch OFF	Battery voltage

WITH INTELLIGENT AIR CONDITIONER SYSTEM : Wiring Diagram - AIR CONDI-

TIONER CONTROL SYSTEM -

INFOID:0000000003941767

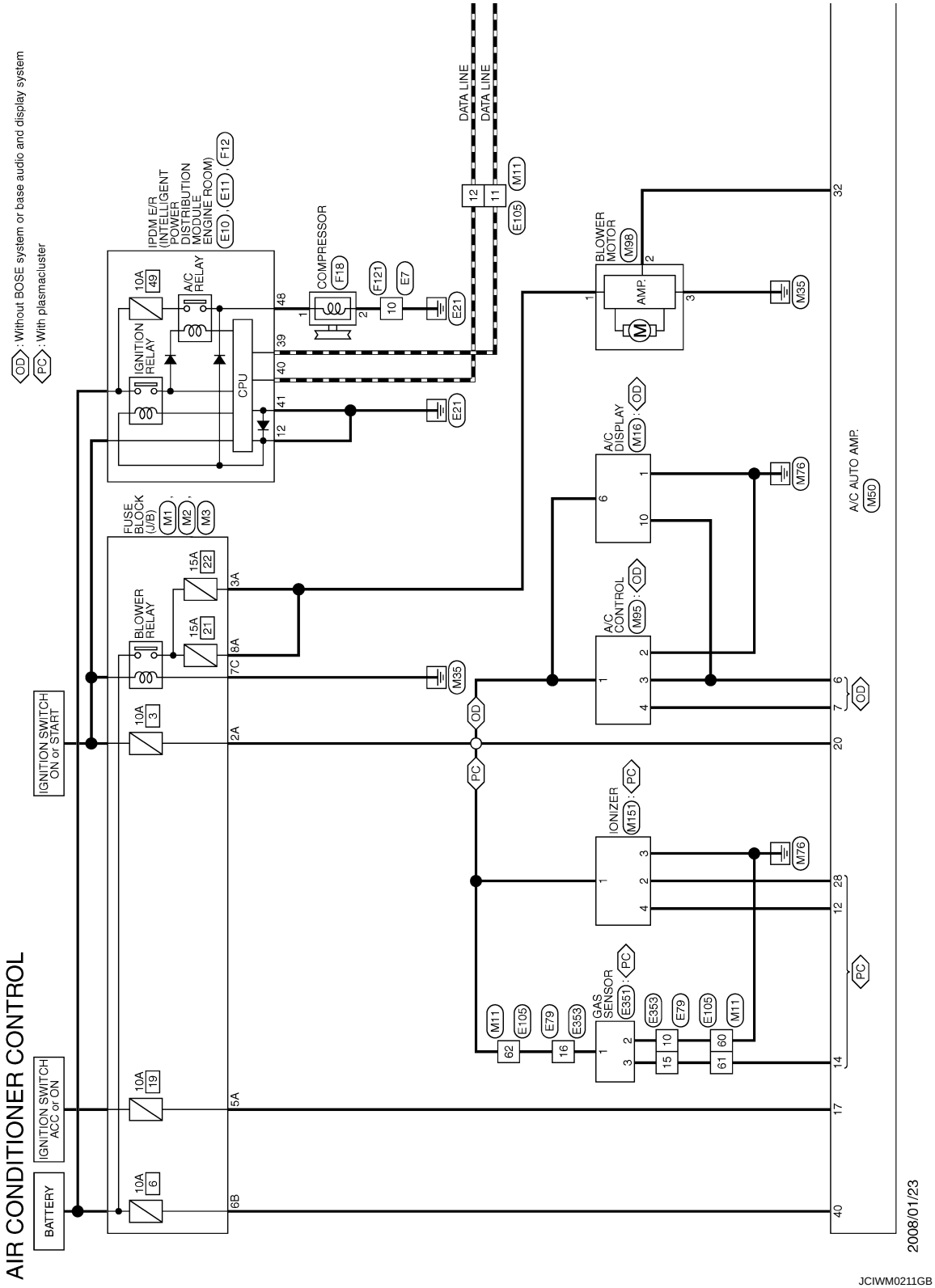

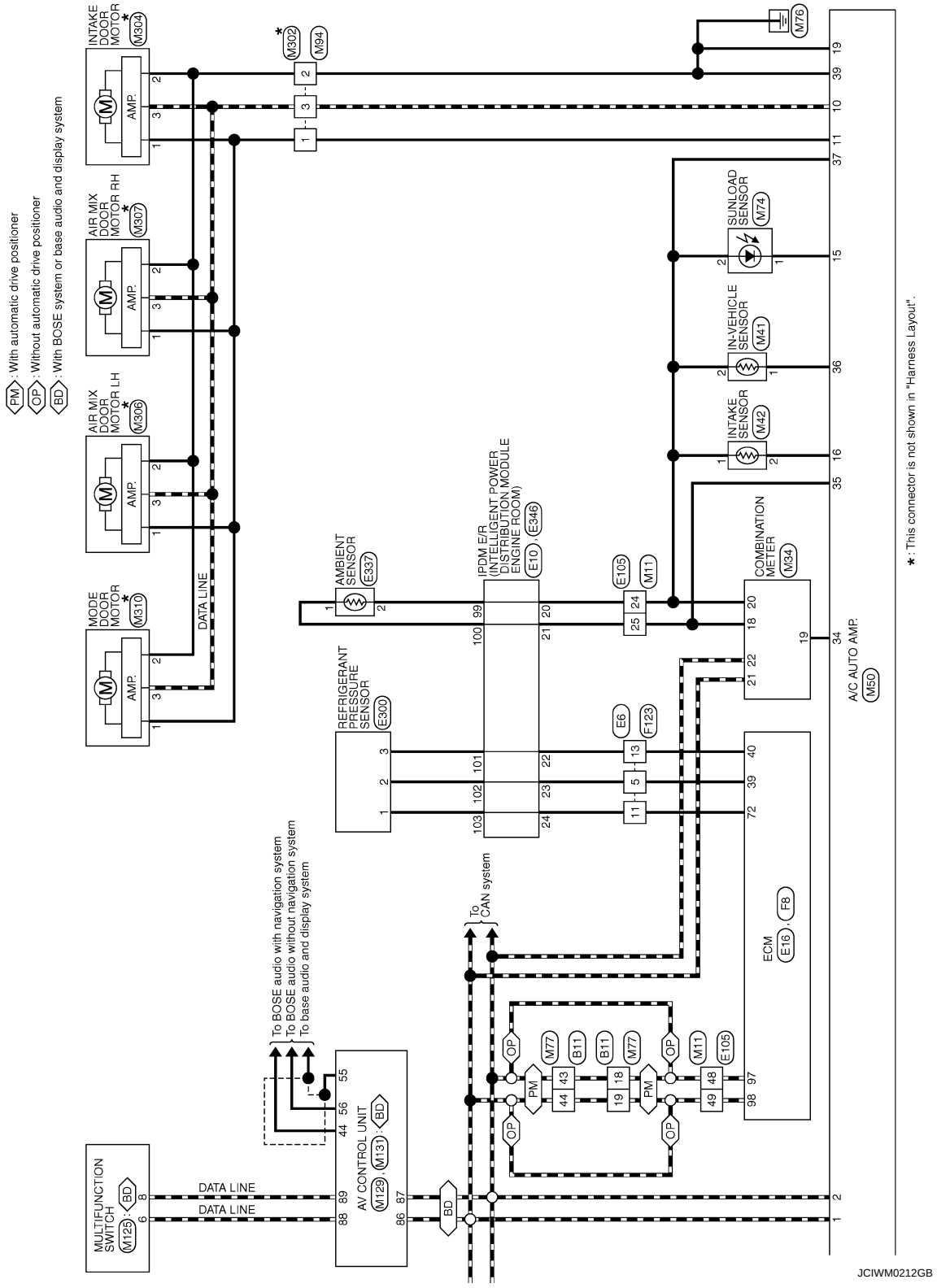
PM : With automatic drive positioner
OP : Without automatic drive positioner
BD : With BOSE system or base audio and display system
INTAKE DOOR MOTOR ★ M304
AIR MIX DOOR MOTOR RH ★ M307
AIR MIX DOOR MOTOR LH ★ M306
MODE DOOR MOTOR ★ M310
AMP.
DATA LINE
M302 ★
M94
M76
SUNLOAD SENSOR M74
IN-VEHICLE SENSOR M41
INTAKE SENSOR M42
AMBIENT SENSOR E337
IPDM E/R (INTELLIGENT POWER DISTRIBUTION MODULE ENGINE ROOM) E10, E346
E105
M11
COMBINATION METER M34
A/C AUTO AMP. M50
★: This connector is not shown in "Harness Layout".
REFRIGERANT PRESSURE SENSOR E300
E6
F123
To BOSE audio with navigation system
To BOSE audio without navigation system
To base audio and display system
To CAN system
ECM E16, F8
M77
B11
MULTIFUNCTION SWITCH M125
AV CONTROL UNIT M129, M131
JCIWM0212GB

AIR CONDITIONER CONTROL

Connector No.	B11
Connector Name	WIRE TO WIRE
Connector Type	TH80MW-CS19

H.S.

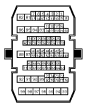

Terminal No.	Color of Wire	Signal Name [Specification]
18	P	–
19	L	–
43	P	–
44	L	–

Connector No.	E6
Connector Name	WIRE TO WIRE
Connector Type	TK16MGY-1V

H.S.

Terminal No.	Color of Wire	Signal Name [Specification]
5	GR	–
11	G	–
13	SB	–

Connector No.	E7
Connector Name	WIRE TO WIRE
Connector Type	NS10MW-CS

H.S.

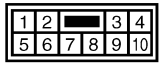

Terminal No.	Color of Wire	Signal Name [Specification]
10	B/W	–

Connector No.	E10
Connector Name	IPDM E/R (INTELLIGENT POWER DISTRIBUTION MODULE ENGINE ROOM)
Connector Type	TH20FW-CS12-M4-1V

H.S.

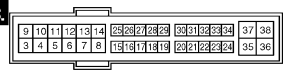

Terminal No.	Color of Wire	Signal Name [Specification]
12	B/W	–
20	B	–
21	O	–
22	SB	–
23	GR	–
24	G	–

Connector No.	E11
Connector Name	IPDM E/R (INTELLIGENT POWER DISTRIBUTION MODULE ENGINE ROOM)
Connector Type	TH08FW-NH

H.S.

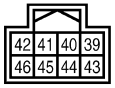

Terminal No.	Color of Wire	Signal Name [Specification]
39	P	–
40	L	–
41	B	–

Connector No.	E16
Connector Name	ECM
Connector Type	RH24FB-RZ8-L-LH

H.S.

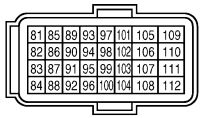

Terminal No.	Color of Wire	Signal Name [Specification]
97	P	VEHCAN-L
98	L	VEHCAN-H

Connector No.	E79
Connector Name	WIRE TO WIRE
Connector Type	TK20MW

H.S.

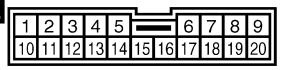

Terminal No.	Color of Wire	Signal Name [Specification]
10	LG	–
15	L	–
16	BR	–

Connector No.	E105
Connector Name	WIRE TO WIRE
Connector Type	TH70MW-CS10-M3

H.S.

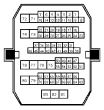

Terminal No.	Color of Wire	Signal Name [Specification]
11	P	–
12	L	–
24	B	–
25	O	–
48	P	–
49	L	–
60	LG	–
61	L	–
62	BR	–

JCIWM0213GB

AIR CONDITIONER CONTROL

Connector No.	E300
Connector Name	REFRIGERANT PRESSURE SENSOR
Connector Type	RK03FB

Terminal No.	Color of Wire	Signal Name [Specification]
1	P	–
2	R	–
3	GR	–

Connector No.	E337
Connector Name	AMBIENT SENSOR
Connector Type	RS02FB

Terminal No.	Color of Wire	Signal Name [Specification]
1	SB	–
2	W	–

Connector No.	E346
Connector Name	IPDM E/R (INTELLIGENT POWER DISTRIBUTION MODULE ENGINE ROOM)
Connector Type	TH16FW-NH

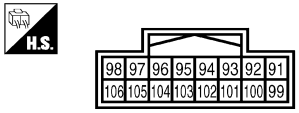

Terminal No.	Color of Wire	Signal Name [Specification]
99	W	–
100	SB	–
101	GR	–
102	R	–
103	P	–

Connector No.	E351
Connector Name	GAS SENSOR
Connector Type	RH03FB

Terminal No.	Color of Wire	Signal Name [Specification]
1	O	–
2	BR	–
3	G	–

Connector No.	E353
Connector Name	WIRE TO WIRE
Connector Type	TK20FW

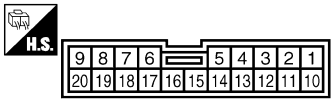

Terminal No.	Color of Wire	Signal Name [Specification]
10	BR	–
15	G	–
16	O	–

Connector No.	F8
Connector Name	ECM
Connector Type	RH40FBR-RZ8-L-LH

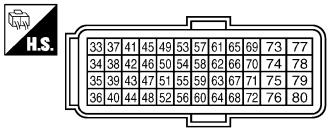

Terminal No.	Color of Wire	Signal Name [Specification]
39	R	PDPRES
40	G	GNDA-PDPRES
72	BR/W	AVCC2-PDPRES

Connector No.	F12
Connector Name	IPDM E/R (INTELLIGENT POWER DISTRIBUTION MODULE ENGINE ROOM)
Connector Type	TH20FW-CS12-M4

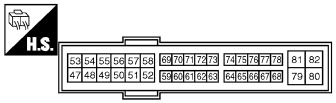

Terminal No.	Color of Wire	Signal Name [Specification]
48	Y/R	–

Connector No.	F18
Connector Name	COMPRESSOR
Connector Type	RH02FB

Terminal No.	Color of Wire	Signal Name [Specification]
1	W	–
2	B	–

JCIWM0214GB

AIR CONDITIONER CONTROL

Connector No.	F121
Connector Name	WIRE TO WIRE
Connector Type	NS10FW-CS

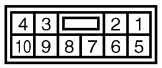

Terminal No.	Color of Wire	Signal Name [Specification]
10	B	–

Connector No.	F123
Connector Name	WIRE TO WIRE
Connector Type	TK16FGY-1V

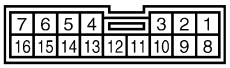

Terminal No.	Color of Wire	Signal Name [Specification]
5	R	–
11	BR/W	–
13	G	–

Connector No.	M1
Connector Name	FUSE BLOCK (J/B)
Connector Type	NS06FW-M2

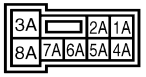

Terminal No.	Color of Wire	Signal Name [Specification]
2A	G/O	–
3A	W/L	–
5A	V/O	–
8A	W/L	–

Connector No.	M2
Connector Name	FUSE BLOCK (J/B)
Connector Type	NS10FW-CS

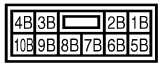

Terminal No.	Color of Wire	Signal Name [Specification]
6B	Y/R	–

Connector No.	M3
Connector Name	FUSE BLOCK (J/B)
Connector Type	NS12FW-CS

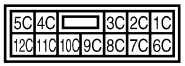

Terminal No.	Color of Wire	Signal Name [Specification]
7C	B/P	–

Connector No.	M11
Connector Name	WIRE TO WIRE
Connector Type	TH70FW-CS10-M3

Terminal No.	Color of Wire	Signal Name [Specification]
11	P	–
12	L	–
24	B/Y	–
25	O/B	–
48	P	–
49	L	–
60	B	–
61	G	–
62	G	–

Connector No.	M16
Connector Name	A/C DISPLAY
Connector Type	TH10FB-NH

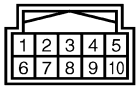

Terminal No.	Color of Wire	Signal Name [Specification]
1	B	GND
6	G	IGN
10	L	RX(AMP>DISP)

Connector No.	M34
Connector Name	COMBINATION METER
Connector Type	TH40FW-NH

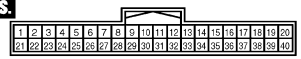

Terminal No.	Color of Wire	Signal Name [Specification]
18	O/B	AMBIENT SENSOR SIGNAL
19	P	A/C AUTO AMP. CONNECTION RECOGNITION SIGNAL
20	B/Y	AMBIENT SENSOR GROUND
21	L	CAN-H
22	P	CAN-L

JCIWM0215GB

AIR CONDITIONER CONTROL

Connector No.	M41
Connector Name	IN-VEHICLE SENSOR
Connector Type	A02FW

Terminal No.	Color of Wire	Signal Name [Specification]
1	LG	–
2	B/Y	–

Connector No.	M42
Connector Name	INTAKE SENSOR
Connector Type	C02FW

Terminal No.	Color of Wire	Signal Name [Specification]
1	B/Y	–
2	R/G	–

Connector No.	M50
Connector Name	A/C AUTO AMP.
Connector Type	SAB40FW

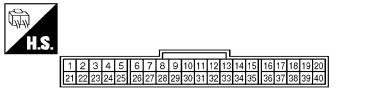

Terminal No.	Color of Wire	Signal Name [Specification]
1	L	CAN-H
2	P	CAN-L
6	L	TX(AMP>SW&DISP)
7	P	RX(SW>AMP)
10	L/R	LAN SIGNAL
11	L/W	POWER SUPPLY FOR EACH DOOR MOTOR
12	O	ION ON/OFF SIGNAL
14	G	GAS SENSOR SIGNAL
15	O	SUNLOAD SENSOR SIGNAL
16	R/G	INTAKE SENSOR SIGNAL
17	V/W	ACC POWER SUPPLY
19	B	GROUND
20	G/W	IGN POWER SUPPLY
28	G/Y	ION CONTROL MODE OUTPUT SIGNAL
32	L/Y	BLOWER MOTOR CONTROL SIGNAL
34	P	A/C AUTO AMP. CONNECTION RECOGNITION SIGNAL
35	O/B	AMBIENT SENSOR SIGNAL
36	LG	IN-VEHICLE SENSOR SIGNAL
37	B/Y	SENSOR GND
39	B	GROUND
40	Y/R	BAT POWER SUPPLY

Connector No.	M74
Connector Name	SUNLOAD SENSOR
Connector Type	K02FB

Terminal No.	Color of Wire	Signal Name [Specification]
1	O	–
2	B/Y	–

Connector No.	M77
Connector Name	WIRE TO WIRE
Connector Type	TH80FW-CS19

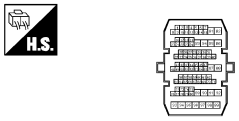

Terminal No.	Color of Wire	Signal Name [Specification]
18	P	–
19	L	–
43	P	–
44	L	–

Connector No.	M94
Connector Name	WIRE TO WIRE
Connector Type	A03MW

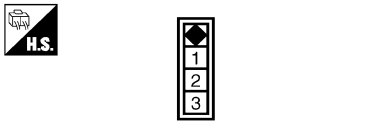

Terminal No.	Color of Wire	Signal Name [Specification]
1	L/W	–
2	B	–
3	L/R	–

Connector No.	M95
Connector Name	A/C CONTROL
Connector Type	TH12FW-NH

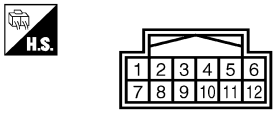

Terminal No.	Color of Wire	Signal Name [Specification]
1	G/W	IGN
2	B	GND
3	L	RX(AMP>SW)
4	P	TX(SW>AMP)

JCIWM0216GB

AIR CONDITIONER CONTROL

Connector No.	M98
Connector Name	BLOWER MOTOR
Connector Type	NS03FW-M3

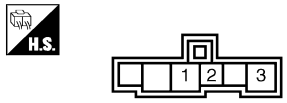

Terminal No.	Color of Wire	Signal Name [Specification]
1	W/L	–
2	L/Y	–
3	B	–

Connector No.	M125
Connector Name	MULTIFUNCTION SWITCH
Connector Type	TH16FW-NH

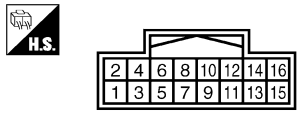

Terminal No.	Color of Wire	Signal Name [Specification]
6	W	M-CAN H
8	B	M-CAN L

Connector No.	M129
Connector Name	AV CONTROL UNIT
Connector Type	TH24FW-NH

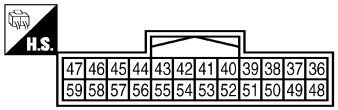

Terminal No.	Color of Wire	Signal Name [Specification]
44	G	COMM (DISP->CONT)
55	SHIELD	SHIELD
56	R	COMM (CONT->DISP)

Connector No.	M131
Connector Name	AV CONTROL UNIT
Connector Type	TH32FW-NH

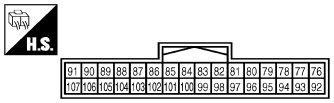

Terminal No.	Color of Wire	Signal Name [Specification]
86	L	CAN-H
87	P	CAN-L
88	W	AV COMM (H)
89	B	AV COMM (L)

Connector No.	M151
Connector Name	IONIZER
Connector Type	TH04FW-NH

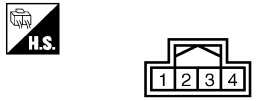

Terminal No.	Color of Wire	Signal Name [Specification]
1	G/W	IGN
2	G/Y	ION-MODE
3	B	GND
4	O	ION-ON/OFF

Connector No.	M302
Connector Name	WIRE TO WIRE
Connector Type	A03FW

Terminal No.	Color of Wire	Signal Name [Specification]
1	–	–
2	–	–
3	–	–

Connector No.	M304
Connector Name	INTAKE DOOR MOTOR
Connector Type	A03FW

Terminal No.	Color of Wire	Signal Name [Specification]
1	–	–
2	–	–
3	–	–

Connector No.	M306
Connector Name	AIR MIX DOOR MOTOR LH
Connector Type	A03FW

Terminal No.	Color of Wire	Signal Name [Specification]
1	–	–
2	–	–
3	–	–

JCIWM0217GB

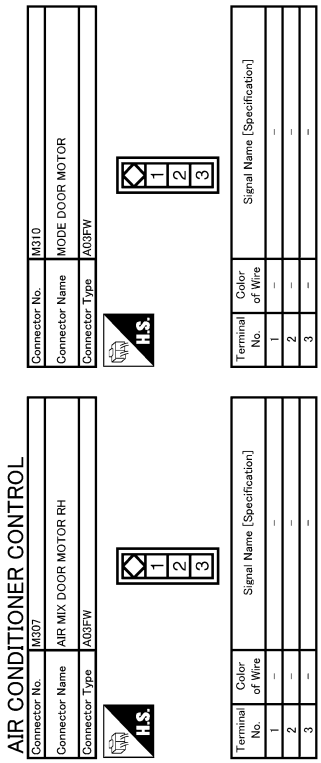

JCIWM0218GB

WITH INTELLIGENT AIR CONDITIONER SYSTEM : Fail-Safe

INFOID:0000000003940039

FAIL-SAFE FUNCTION

If a communication error exists between the A/C auto amp., and the AV control unit and preset switch for 30 seconds or longer, air conditioner is controlled under the following conditions:

Compressor	**: ON**
Air outlet	**: AUTO**
Air inlet	**: FRE (Fresh)**
Blower fan speed	**: AUTO**
Set temperature	**: Setting before communication error occurs**

WITH INTELLIGENT AIR CONDITIONER SYSTEM : DTC Inspection Priority Chart

INFOID:0000000003884796

If some DTCs are displayed at the same time, perform inspections one by one based on the following priority chart.

Priority	Detected items (DTC)
1	• U1000: CAN COMM CIRCUIT • U1010: CONTROL UNIT (CAN)
2	• B257B: AMB TEMP SEN (SHORT) • B257C: AMB TEMP SEN (OPEN) • B2578: IN CAR SENSOR (OUT OF RANGE [LOW]) • B2579: IN CAR SENSOR (OUT OF RANGE [HI]) • B2581: EVAP TEMP SEN (SHORT) • B2582: EVAP TEMP SEN (OPEN) • B262A: GAS SENSOR (SHORT) • B262B: GAS SENSOR (OPEN) • B2630: SUNLOAD SEN (SHORT) • B2631: SUNLOAD SEN (OPEN) • B2632: DR AIRMIX ACTR (SHORT) • B2633: DR AIRMIX ACTR (OPEN) • B2634: PASS AIRMIX ACTR (SHORT) • B2635: PASS AIRMIX ACTR (OPEN) • B2636: DR VENT DOOR FAIL • B2637: DR B/L DOOR FAIL • B2638: DR D/F1 DOOR FAIL • B2639: DR DEF DOOR FAIL • B263D: FRE DOOR FAIL • B263E: 20P FRE DOOR FAIL • B263F: REC DOOR FAIL • B2654: D/F2 DOOR FAIL • B2655: B/L2 DOOR FAIL • B2656: BTC FRE DOOR FAIL • B2657: GAS SENSOR CIRCUIT (SHORT) • B2658: GAS SENSOR CIRCUIT (OPEN)

WITH INTELLIGENT AIR CONDITIONER SYSTEM : DTC Index

INFOID:0000000003884797

DTC	Items (CONSULT-III screen terms)	Reference
U1000	CAN COMM CIRCUIT	HAC-164, "DTC Logic"
U1010	CONTROL UNIT (CAN)	HAC-165, "DTC Logic"
B257B	AMB TEMP SEN (SHORT)	HAC-166, "DTC Logic"
B257C	AMB TEMP SEN (OPEN)	HAC-166, "DTC Logic"
B2578	IN CAR SENSOR (OUT OF RANGE [LOW])	HAC-169, "DTC Logic"
B2579	IN CAR SENSOR (OUT OF RANGE [HI])	HAC-169, "DTC Logic"
B2581	EVAP TEMP SEN (SHORT)	HAC-172, "DTC Logic"
B2582	EVAP TEMP SEN (OPEN)	HAC-172, "DTC Logic"
B262A	GAS SENSOR (SHORT)	HAC-175, "WITH INTELLIGENT AIR CONDITIONER SYSTEM : DTC Logic"

DTC	Items (CONSULT-III screen terms)	Reference
B262B	GAS SENSOR (OPEN)	HAC-175, "WITH INTELLIGENT AIR CONDITIONER SYSTEM : DTC Logic"
B2630*	SUNLOAD SEN (SHORT)	HAC-178, "DTC Logic"
B2631*	SUNLOAD SEN (OPEN)	HAC-178, "DTC Logic"
B2632	DR AIRMIX ACTR (SHORT)	HAC-181, "DTC Logic"
B2633	DR AIRMIX ACTR (OPEN)	HAC-181, "DTC Logic"
B2634	PASS AIRMIX ACTR (SHORT)	HAC-183, "DTC Logic"
B2635	PASS AIRMIX ACTR (OPEN)	HAC-183, "DTC Logic"
B2636	DR VENT DOOR FAIL	HAC-185, "DTC Logic"
B2637	DR B/L DOOR FAIL	HAC-185, "DTC Logic"
B2638	DR D/F1 DOOR FAIL	HAC-185, "DTC Logic"
B2639	DR DEF DOOR FAIL	HAC-185, "DTC Logic"
B263D	FRE DOOR FAIL	HAC-188, "DTC Logic"
B263E	20P FRE DOOR FAIL	HAC-188, "DTC Logic"
B263F	REC DOOR FAIL	HAC-188, "DTC Logic"
B2654	D/F2 DOOR FAIL	HAC-185, "DTC Logic"
B2655	B/L2 DOOR FAIL	HAC-185, "DTC Logic"
B2656	BTC FRE DOOR FAIL	HAC-188, "DTC Logic"
B2657	GAS SENSOR CIRCUIT (SHORT)	HAC-175, "WITH INTELLIGENT AIR CONDITIONER SYSTEM : DTC Logic"
B2658	GAS SENSOR CIRCUIT (OPEN)	HAC-175, "WITH INTELLIGENT AIR CONDITIONER SYSTEM : DTC Logic"

*: Perform self-diagnosis under sunshine. When performing indoors, aim a light (more than 60 W) at sunload sensor, otherwise self-diagnosis indicates even though the sunload sensor is functioning normally.

SYMPTOM DIAGNOSIS

AIR CONDITIONER CONTROL

Diagnosis Chart By Symptom

INFOID:0000000003884798

Symptom	Reference	
A/C system does not activate.	Go to Trouble Diagnosis Procedure for Power Supply And Ground Circuit.	HAC-191, "A/C AUTO AMP. : Diagnosis Procedure"
A/C system cannot be controlled.	Go to Trouble Diagnosis Procedure for Preset Switch System.	AV-164, "Symptom Table" (DISPLAY AND AUDIO SYSTEM), AV-372, "Symptom Table" (BOSE AUDIO WITHOUT NAVIGATION) or AV-640, "Symptom Table" (BOSE AUDIO WITH NAVIGATION).
Air outlet does not change.	Go to Trouble Diagnosis Procedure for Mode Door Motor. (LAN)	HAC-186, "Diagnosis Procedure"
Mode door motor does not operate normally.		
Discharge air temperature does not change.	Go to Trouble Diagnosis Procedure for Air Mix Door Motor. (LAN)	HAC-182, "Diagnosis Procedure" (driver side) or HAC-184, "Diagnosis Procedure" (passenger side)
Air mix door motor does not operate normally.		
Intake door does not change.	Go to Trouble Diagnosis Procedure for Intake Door Motor. (LAN)	HAC-189, "Diagnosis Procedure"
Intake door motor does not operate normally.		
Blower motor operation is malfunctioning.	Go to Trouble Diagnosis Procedure for Blower Motor.	HAC-193, "Diagnosis Procedure"
Magnet clutch does not engage.	Go to Trouble Diagnosis Procedure for Magnet Clutch.	HAC-197, "Diagnosis Procedure"
Insufficient cooling	Go to Trouble Diagnosis Procedure for Insufficient Cooling.	HAC-228, "Inspection procedure"
No cool air comes out. (Air flow volume is normal.)		
Insufficient heating	Go to Trouble Diagnosis Procedure for Insufficient Heating.	HAC-231, "Inspection procedure"
No warm air comes out. (Air flow volume is normal.)		
Noise	Go to Trouble Diagnosis Procedure for Noise.	HAC-234, "Inspection procedure"
Memory function does not operate.	Go to Trouble Diagnosis Procedure for Memory Function.	HAC-236, "Inspection procedure"
Plasmacluster system does not operate.*	Go to Trouble Diagnosis Procedure for Plasmacluster system.	HAC-227, "WITH INTELLIGENT AIR CONDITIONER SYSTEM : Inspection procedure"

*:WITH INTELLIGENT AIR CONDITIONER SYSTEM

PLASMACLUSTER SYSTEM DOES NOT OPERATE WITH INTELLIGENT AIR CONDITIONER SYSTEM

WITH INTELLIGENT AIR CONDITIONER SYSTEM : Description

INFOID:0000000003884799

Symptom
- Intelligent air conditioner does not operate.

WITH INTELLIGENT AIR CONDITIONER SYSTEM : Inspection procedure

INFOID:0000000003884800

FUNCTION CONFIRMATION PROCEDURE

Check the plasmacluster operation in the function inspection.

1. CHECK PLASMACLUSTER ION CONTROL FUNCTION

1. Start the engine.
2. Turn fan control dial clockwise.
3. Ion indicator is turned ON.
4. Press OFF switch.
5. Ion indicator is turned OFF.

Is the inspection result normal?

YES >> GO TO 2.
NO >> GO TO 3.

2. CHECK ION CONTROL MODE

1. Turn ignition switch OFF and restart the engine.
2. Turn fan control dial clockwise.
3. Ion indicator (blue) is turned ON.
4. Ion indicator (blue) changes to ion indicator (green) after approximately 15 minutes.
5. Ion indicator (green) changes to ion indicator (blue) after approximately 15 minutes.
6. Press CLEAN switch.
7. Ion indicator (blue) changes to ion indicator (green) after approximately 30 minutes.
8. Ion indicator (green) changes to ion indicator (blue) after approximately 15 minutes.

Is the inspection result normal?

YES >> GO TO 3.
NO >> Replace A/C auto amp.

3. CHECK WITH ACTIVE TEST OF CONSULT-III

Using CONSULT-III, perform “HVAC TEST” “ACTIVE TEST” of HVAC to check each output device. Refer to HAC-159, "WITH INTELLIGENT AIR CONDITIONER SYSTEM : CONSULT-III Function".

Code No.	MODE 1	MODE 2	MODE 3	MODE 4	MODE 5	MODE 6	MODE 7
Ionizer	ON	ON	ON	ON	ON	OFF	-
Ion mode	ION	ION	CLEAN	CLEAN	ION	-	-

NOTE:
- Perform the inspection of each output device after starting the engine because the compressor is operated.
- When choosing to “MODE 7”, error message is displayed but it is not malfunction.

Does plasmacluster system change according to each code No.?

YES >> END.
NO-1 >> Ionizer operation is malfunctioning. Refer to HAC-199, "WITH INTELLIGENT AIR CONDITIONER SYSTEM : Component Function Check".
NO-2 >> Ion indicator does not change. Replace A/C auto amp.
NO-3 >> Ion indicator does not illuminate. Refer to AV-640, "Symptom Table".

INSUFFICIENT COOLING

Description

INFOID:0000000003884801

Symptom
- Insufficient cooling
- No cool air comes out. (Air flow volume is normal.)

Inspection procedure

INFOID:0000000003884802

1. CHECK WITH A GAUGE OF RECOVERY/RECYCLING RECHARGING EQUIPMENT

Connect the recovery/recycling recharging equipment to the vehicle and perform the pressure inspection with the gauge.

Is there refrigerant?

YES >> GO TO 2.
NO-1 >> Check for refrigerant leakages with the refrigerant leakage detecting fluorescent leak detector. Refer to HA-32, "Inspection".
NO-2 >> GO TO 2 after repairing or replacing the parts according to the inspection results.

2. CHECK CHARGED REFRIGERANT AMOUNT

1. Connect recovery/recycling recharging equipment to the vehicle and discharge the refrigerant.
2. Recharge with the proper amount of refrigerant and perform the inspection with the refrigerant leakage detecting fluorescent leak detector. Refer to HA-32, "Inspection".

Is the inspection result normal?

YES >> GO TO 3.
NO >> Refill the refrigerant and repair or replace the parts according to the inspection results.

3. CHECK REFRIGERANT CYCLE PRESSURE

Connect recovery/recycling recharging equipment to the vehicle and perform the performance test. Refer to HA-30, "Performance Chart".

Is the inspection result normal?

YES >> GO TO 4.
NO >> Perform the diagnosis with the gauge pressure. Refer to HA-8, "Trouble Diagnosis For Unusual Pressure".

4. CHECK SETTING OF TEMPERATURE SETTING TRIMMER

Using CONSULT-III, check the setting of “TEMP SET CORRECT” on “WORK SUPPORT” of HVAC. Refer to HAC-110, "WITHOUT INTELLIGENT AIR CONDITIONER SYSTEM : Temperature Setting Trimmer" (WITHOUT INTELLIGENT AIR CONDITIONER SYSTEM) or HAC-114, "WITH INTELLIGENT AIR CONDITIONER SYSTEM : Temperature Setting Trimmer" (WITH INTELLIGENT AIR CONDITIONER SYSTEM).

1. Check that the temperature setting trimmer is set to “+ direction”.
   NOTE:
   The control temperature can be set with the setting of the temperature setting trimmer.
2. Set temperature control dial to “0”.

Are the malfunction solved?

YES >> Perform the setting separately if necessary. END.
NO >> GO TO 5.

5. CHECK WITH SELF-DIAGNOSIS FUNCTION OF CONSULT-III

1. Using CONSULT-III, perform “SELF-DIAGNOSIS RESULTS” of HVAC.
2. Check if any DTC is displayed in the trouble diagnosis results.
   NOTE:
   If DTC is displayed along with DTC U1000 or U1010, first diagnose the DTC U1000 or U1010. Refer to HAC-164, "DTC Logic" or HAC-165, "DTC Logic".

Is any DTC displayed?

YES >> Perform the diagnosis that is applicable to the sensor and the door motor. Refer to HAC-212, "WITHOUT INTELLIGENT AIR CONDITIONER SYSTEM : DTC Index" (WITHOUT INTELLI-

GENT AIR CONDITIONER SYSTEM) or HAC-224, "WITH INTELLIGENT AIR CONDITIONER SYSTEM : DTC Index" (WITH INTELLIGENT AIR CONDITIONER SYSTEM).

NO >> GO TO 6.

6. CHECK WITH ACTIVE TEST OF CONSULT-III

1. Using CONSULT-III, perform “HVAC TEST” on “ACTIVE TEST” of HVAC to check each output device. Refer to HAC-156, "WITHOUT INTELLIGENT AIR CONDITIONER SYSTEM : CONSULT-III Function" (WITHOUT INTELLIGENT AIR CONDITIONER SYSTEM) or HAC-159, "WITH INTELLIGENT AIR CONDITIONER SYSTEM : CONSULT-III Function" (WITH INTELLIGENT AIR CONDITIONER SYSTEM).
   NOTE:
   Perform the ACTIVE TEST after starting the engine because the compressor is operated.
2. Refer to the table and check the outlet, inlet, air flow temperature, blower motor control signal, magnet clutch operation, and air mix ratio. Visually check each operating condition, by listening for noise, touching air outlets with a hand, etc.

	Test item						
	MODE 1	MODE 2	MODE 3	MODE 4	MODE 5	MODE 6	MODE 7
Mode door position	VENT	B/L1	B/L2	AUTO FOOT	D/F	DEF	-
Intake door position	REC	REC	20% FRE	FRE	FRE	FRE	-
Air mix door position (driver & passenger side)	FULL COLD	FULL COLD	FULL HOT	FULL HOT	FULL HOT	FULL HOT	-
Blower motor duty ratio	37%	91%	65%	65%	65%	91%	-
Compressor (Magnet clutch)	ON	ON	OFF	OFF	ON	ON	-

NOTE:
- Perform the inspection of each output device after starting the engine because the compressor is operated.
- When choosing to “MODE 7”, error message is displayed but it is not malfunction.

Discharge air flow						
Mode position indication	Condition	Air outlet/distribution				
		VENT		FOOT		DEF
		Front	Rear	Front	Rear	
	DUAL switch: OFF Rear ventilator : OPEN	89%	11%	—	—	—
		46%	17%	27%	10%	—
		14%	16%	34%	14%	22%
		12%	16%	27%	13%	32%
		11%	12%	—	—	77%

JPIIA0877GB

Does it operate normally?

YES >> GO TO 7.
NO-1 >> Air outlet does not change. Refer to HAC-186, "Diagnosis Procedure".
NO-2 >> Air inlet does not change. Refer to HAC-189, "Diagnosis Procedure".
NO-3 >> Discharge air temperature does not change (driver side). Refer to HAC-182, "Diagnosis Procedure".
NO-4 >> Discharge air temperature does not change (passenger side). Refer to HAC-184, "Diagnosis Procedure".
NO-5 >> Blower motor does not operate normally. Refer to HAC-193, "Diagnosis Procedure".
NO-6 >> Magnet clutch does not operate. Refer to HAC-197, "Diagnosis Procedure".

7. CHECK DRIVE BELT

Check tension of the drive belt. Refer to EM-12, "Checking".

Is the inspection result normal?

YES >> GO TO 8.
NO >> Adjust or replace drive belt.

8. CHECK AIR LEAKAGE FROM DUCT

Check duct and nozzle, etc, of the A/C system for air leakage.

Is the inspection result normal?

YES >> INSPECTION END
NO >> Repair or replace parts according to the inspection results.

INSUFFICIENT HEATING

Description

INFOID:0000000003884803

Symptom
- Insufficient heating
- No warm air comes out. (Air flow volume is normal.)

Inspection procedure

INFOID:0000000003884804

1. CHECK COOLING SYSTEM

1. Check engine coolant level and check for leakage. Refer to CO-8, "Inspection".
2. Check radiator cap. Refer to CO-12, "RADIATOR CAP : Inspection".
3. Check water flow sounds of engine coolant. Refer to CO-9, "Refilling".

Is the inspection result normal?

YES >> GO TO 2.
NO >> Refill the engine coolant and repair or replace the parts according to the inspection results.

2. CHECK OPERATION

1. Press temperature control dial (driver side) and raise temperature setting to 32°C (90°F) after warming up the engine.
2. Check that warm air blows from the outlets.

Is the inspection result normal?

YES >> END.
NO >> GO TO 3.

3. CHECK SETTING OF TEMPERATURE SETTING TRIMMER

Using CONSULT-III, check the setting of “TEMP SET CORRECT” on “WORK SUPPORT” of HVAC. Refer to HAC-110, "WITHOUT INTELLIGENT AIR CONDITIONER SYSTEM : Temperature Setting Trimmer" (WITHOUT INTELLIGENT AIR CONDITIONER SYSTEM) or HAC-114, "WITH INTELLIGENT AIR CONDITIONER SYSTEM : Temperature Setting Trimmer" (WITH INTELLIGENT AIR CONDITIONER SYSTEM).

1. Check that the temperature setting trimmer is set to “– direction”.
   NOTE:
   The control temperature can be set by the temperature setting trimmer.
2. Set temperature control dial to “0”.

Are the malfunction solved?

YES >> Perform the setting separately if necessary. END.
NO >> GO TO 4.

4. CHECK WITH SELF-DIAGNOSIS FUNCTION OF CONSULT-III

1. Using CONSULT-III, perform “SELF-DIAGNOSIS RESULTS” of HVAC.
2. Check if any DTC is displayed in the trouble diagnosis results.
   NOTE:
   If DTC is displayed along with DTC U1000 or U1010, first diagnose the DTC U1000 or U1010. Refer to HAC-164, "DTC Logic" or HAC-165, "DTC Logic".

Is any DTC displayed?

YES >> Perform the diagnosis that is applicable to the sensor and the door motor. Refer to HAC-212, "WITHOUT INTELLIGENT AIR CONDITIONER SYSTEM : DTC Index" (WITHOUT INTELLIGENT AIR CONDITIONER SYSTEM) or HAC-224, "WITH INTELLIGENT AIR CONDITIONER SYSTEM : DTC Index" (WITH INTELLIGENT AIR CONDITIONER SYSTEM).
NO >> GO TO 5.

5. CHECK WITH ACTIVE TEST OF CONSULT-III

1. Using CONSULT-III, perform “HVAC TEST” in “ACTIVE TEST” of HVAC to check each output device. Refer to HAC-156, "WITHOUT INTELLIGENT AIR CONDITIONER SYSTEM : CONSULT-III Function" (WITHOUT INTELLIGENT AIR CONDITIONER SYSTEM) or HAC-159, "WITH INTELLIGENT AIR CONDITIONER SYSTEM : CONSULT-III Function" (WITH INTELLIGENT AIR CONDITIONER SYSTEM).
   NOTE:

Perform the ACTIVE TEST after starting the engine because the compressor is operated.

2. Refer to the table and check the outlet, inlet, air flow temperature, blower motor control signal, magnet clutch operation, and air mix ratio. Visually check each operating condition, by listening for noise, touching air outlets with a hand, etc.

	Test item						
	MODE 1	MODE 2	MODE 3	MODE 4	MODE 5	MODE 6	MODE 7
Mode door position	VENT	B/L1	B/L2	AUTO FOOT	D/F	DEF	-
Intake door position	REC	REC	20% FRE	FRE	FRE	FRE	-
Air mix door position (driver & passenger side)	FULL COLD	FULL COLD	FULL HOT	FULL HOT	FULL HOT	FULL HOT	-
Blower motor duty ratio	37%	91%	65%	65%	65%	91%	-
Compressor (Magnet clutch)	ON	ON	OFF	OFF	ON	ON	-

NOTE:
- Perform the inspection of each output device after starting the engine because the compressor is operated.
- When choosing to “MODE 7”, error message is displayed but it is not malfunction.

Discharge air flow						
Mode position indication	Condition	Air outlet/distribution				
		VENT		FOOT		DEF
		Front	Rear	Front	Rear	
	DUAL switch: OFF Rear ventilator : OPEN	89%	11%	—	—	—
		46%	17%	27%	10%	—
		14%	16%	34%	14%	22%
		12%	16%	27%	13%	32%
		11%	12%	—	—	77%

JPIIA0877GB

Does it operate normally?

YES >> GO TO 6.
NO-1 >> Air outlet does not change. Refer to HAC-186, "Diagnosis Procedure".
NO-2 >> Air inlet does not change. Refer to HAC-189, "Diagnosis Procedure".
NO-3 >> Discharge air temperature does not change (driver side). Refer to HAC-182, "Diagnosis Procedure".
NO-4 >> Discharge air temperature does not change (passenger side). Refer to HAC-184, "Diagnosis Procedure".
NO-5 >> Blower motor does not operate normally. Refer to HAC-193, "Diagnosis Procedure".
NO-6 >> Magnet clutch does not operate. Refer to HAC-197, "Diagnosis Procedure".

6. CHECK AIR LEAKAGE FROM DUCT

Check duct and nozzle, etc, of the A/C system for air leakage.

Is the inspection result normal?

YES >> GO TO 7.
NO >> Repair or replace parts according to the inspection results.

7. CHECK HEATER HOSE INSTALLATION CONDITION

Check the heater hose installation condition visually (for twists, crushes, etc.).

Is the inspection result normal?

YES >> GO TO 8.
NO >> Repair or replace parts according to the inspection results.

8. CHECK TEMPERATURE OF HEATER HOSE

1. Check the temperature of inlet hose and outlet hose of heater core.
2. Check that the inlet side of heater core is hot and the outlet side is slightly lower than/almost equal to the inlet side.

   CAUTION:
   Always perform the temperature inspection in a short period of time because the engine coolant temperature is very hot.

Is the inspection result normal?

YES >> GO TO 9.
NO >> Replace the heater core after performing the procedures after the cooling system inspection. GO TO 1.

9. REPLACE HEATER CORE

Replace the heater core. Refer to heater core. Refer to VTL-101, "Exploded View".

Are the malfunction solved?

YES >> END.
NO >> Perform the procedures again after the cooling system inspection. GO TO 1.

NOISE

Description

INFOID:0000000003884805

Symptom
- Noise
- Noise is heard when the A/C system operates.

Inspection procedure

INFOID:0000000003884806

1. CHECK OPERATION

1. Operate the A/C system and check the operation. Refer to HAC-108, "WITHOUT INTELLIGENT AIR CONDITIONER SYSTEM : Description & Inspection" (WITHOUT INTELLIGENT AIR CONDITIONER SYSTEM) or HAC-112, "WITH INTELLIGENT AIR CONDITIONER SYSTEM : Description & Inspection" (WITH INTELLIGENT AIR CONDITIONER SYSTEM).
2. Check the parts where noise is occurring.

Can the parts where noise is occurring be checked?

YES-1 >> Noise from blower motor: GO TO 2.
YES-2 >> Noise from compressor: GO TO 3.
YES-3 >> Noise from expansion valve: GO TO 4.
YES-4 >> Noise from A/C piping (pipe, flexible hose): GO TO 6.
YES-5 >> Noise from drive belt: GO TO 7.
NO >> END.

2. CHECK BLOWER MOTOR

1. Remove blower motor.
2. Remove foreign materials that are in the blower unit.
3. Check the noise from blower motor again.

Is the inspection result normal?

YES >> END.
NO >> Replace blower motor.

3. CHECK COMPRESSOR

Perform trouble diagnosis for the compressor and check the compressor. Refer to HA-11, "Symptom Table".

Is the inspection result normal?

YES >> END.
NO >> Refill the refrigerant or replace the compressor according to the inspection results.

4. CHECK WITH GAUGE PRESSURE

Perform the diagnosis with the gauge pressure. Refer to HA-8, "Trouble Diagnosis For Unusual Pressure".

Is the inspection result normal?

YES >> GO TO 5.
NO >> Repair or replace parts according to the inspection results.

5. CHECK EXPANSION VALVE

1. Correct the refrigerant with recovery/recycling recharging equipment.
2. Recharge with the proper amount of the collected refrigerant after recycling or new refrigerant.
3. Check for the noise from expansion valve again.

Are the malfunction solved?

YES >> END.
NO >> Replace expansion valve.

6. CHECK A/C PIPING (PIPE, FLEXIBLE HOSE)

1. Check the A/C piping (pipes, flexible hoses) (for deformation and damage, etc.).
2. Check the installation condition of clips and brackets, etc, of the A/C piping (pipes, flexible hoses).

Is the inspection result normal?

YES >> Fix the line with rubber or come vibration absorbing material.

NO >> Repair or replace parts according to the inspection results.

7. CHECK DRIVE BELT

Check tension of the drive belt. Refer to EM-12, "Checking".

Is the inspection result normal?

YES >> Check the noise from compressor: GO TO 3.
NO >> Adjust or replace drive belt according to the inspection results.

MEMORY FUNCTION DOES NOT OPERATE

Description

INFOID:0000000003884807

Symptom
- Memory function does not operate normally.
- The setting is not maintained. (It returns to the initial condition.)

Inspection procedure

INFOID:0000000003884808

1. CHECK OPERATION

1. Set temperature control dial to 32°C (90°F).
2. Press the OFF switch.
3. Turn the ignition switch OFF.
4. Turn the ignition switch ON.
5. Press the AUTO switch.
6. Check that the set temperature is maintained.

Is the inspection result normal?

YES >> END.
NO >> GO TO 2.

2. CHECK POWER SUPPLY AND GROUND CIRCUIT OF A/C AUTO AMP.

Check power supply and ground circuit of the A/C auto amp. Refer to HAC-191, "A/C AUTO AMP. : Diagnosis Procedure".

Is the inspection result normal?

YES >> Replace the A/C auto amp.
NO >> Repair or replace malfunctioning parts.

PRECAUTION

PRECAUTIONS

Precaution for Supplemental Restraint System (SRS) "AIR BAG" and "SEAT BELT PRE-TENSIONER"

INFOID:0000000003884811

The Supplemental Restraint System such as “AIR BAG” and “SEAT BELT PRE-TENSIONER”, used along with a front seat belt, helps to reduce the risk or severity of injury to the driver and front passenger for certain types of collision. Information necessary to service the system safely is included in the “SRS AIRBAG” and “SEAT BELT” of this Service Manual.

WARNING:

- **To avoid rendering the SRS inoperative, which could increase the risk of personal injury or death in the event of a collision which would result in air bag inflation, all maintenance must be performed by an authorized NISSAN/INFINITI dealer.**
- **Improper maintenance, including incorrect removal and installation of the SRS, can lead to personal injury caused by unintentional activation of the system. For removal of Spiral Cable and Air Bag Module, see the “SRS AIRBAG”.**
- **Do not use electrical test equipment on any circuit related to the SRS unless instructed to in this Service Manual. SRS wiring harnesses can be identified by yellow and/or orange harnesses or harness connectors.**

Precaution Necessary for Steering Wheel Rotation after Battery Disconnect

INFOID:0000000003884812

NOTE:

- Before removing and installing any control units, first turn the push-button ignition switch to the LOCK position, then disconnect both battery cables.
- After finishing work, confirm that all control unit connectors are connected properly, then re-connect both battery cables.
- Always use CONSULT-III to perform self-diagnosis as a part of each function inspection after finishing work. If a DTC is detected, perform trouble diagnosis according to self-diagnosis results.

This vehicle is equipped with a push-button ignition switch and a steering lock unit.
If the battery is disconnected or discharged, the steering wheel will lock and cannot be turned.
If turning the steering wheel is required with the battery disconnected or discharged, follow the procedure below before starting the repair operation.

OPERATION PROCEDURE

1. Connect both battery cables.
   NOTE:
   Supply power using jumper cables if battery is discharged.
2. Turn the push-button ignition switch to ACC position.
   (At this time, the steering lock will be released.)
3. Disconnect both battery cables. The steering lock will remain released with both battery cables disconnected and the steering wheel can be turned.
4. Perform the necessary repair operation.
5. When the repair work is completed, re-connect both battery cables. With the brake pedal released, turn the push-button ignition switch from ACC position to ON position, then to LOCK position. (The steering wheel will lock when the push-button ignition switch is turned to LOCK position.)
6. Perform self-diagnosis check of all control units using CONSULT-III.

Precaution for Procedure without Cowl Top Cover

INFOID:0000000003884814

When performing the procedure after removing cowl top cover, cover the lower end of windshield with urethane, etc.

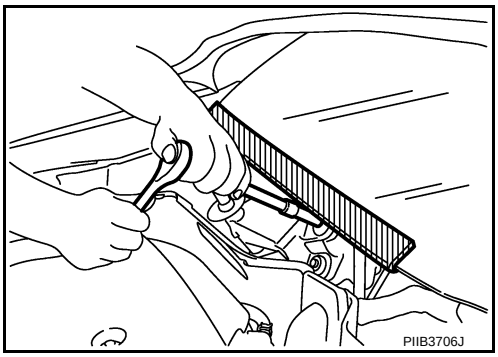

Precautions For Xenon Headlamp Service

INFOID:0000000003884815

WARNING:

Comply with the following warnings to prevent any serious accident.

- **Disconnect the battery cable (negative terminal) or the power supply fuse before installing, removing, or touching the xenon headlamp (bulb included). The xenon headlamp contains high-voltage generated parts.**
- **Never work with wet hands.**
- **Check the xenon headlamp ON-OFF status after assembling it to the vehicle. Never turn the xenon headlamp ON in other conditions. Connect the power supply to the vehicle-side connector. (Turning it ON outside the lamp case may cause fire or visual impairments.)**
- **Never touch the bulb glass immediately after turning it OFF. It is extremely hot.**

CAUTION:

Comply with the following cautions to prevent any error and malfunction.

- **Install the xenon bulb securely. (Insufficient bulb socket installation may melt the bulb, the connector, the housing, etc. by high-voltage leakage or corona discharge.)**
- **Never perform HID circuit inspection with a tester.**
- **Never touch the xenon bulb glass with hands. Never put oil and grease on it.**
- **Dispose of the used xenon bulb after packing it in thick vinyl without breaking it.**
- **Never wipe out dirt and contamination with organic solvent (thinner, gasoline, etc.).**

Working with HFC-134a (R-134a)

INFOID:0000000003884816

CAUTION:

- **CFC-12 (R-12) refrigerant and HFC-134a (R-134a) refrigerant are not compatible. Compressor malfunction is likely to occur if the refrigerants are mixed, refer to “CONTAMINATED REFRIGERANT” below. To determine the purity of HFC-134a (R-134a) in the vehicle and recovery tank, use Refrigerant Recovery/Recycling Recharging equipment and Refrigerant Identifier.**
- **Use only specified lubricant for the HFC-134a (R-134a) A/C system and HFC-134a (R-134a) components. Compressor malfunction is likely to occur if lubricant other than that specified is used.**
- **The specified HFC-134a (R-134a) lubricant rapidly absorbs moisture from the atmosphere. The following handling precautions must be observed:**
- **Immediately cap (seal) the component to minimize the entry of moisture from the atmosphere when removing refrigerant components from a vehicle.**
- **Never remove the caps (unseal) until just before connecting the components when installing refrigerant components to a vehicle. Connect all refrigerant loop components as quickly as possible to minimize the entry of moisture into system.**
- **Use only the specified lubricant from a sealed container. Immediately reseal containers of lubricant. Lubricant becomes moisture saturated and should not be used without proper sealing.**
- **Never allow lubricant (NISSAN A/C System Oil Type S) to come in to contact with styrene foam parts. Damage may result.**

CONTAMINATED REFRIGERANT

Take the appropriate steps shown below if a refrigerant other than pure HFC-134a (R-134a) is identified in a vehicle:

- Explain to the customer that environmental regulations prohibit the release of contaminated refrigerant into the atmosphere.

- Explain that recovery of the contaminated refrigerant could damage service equipment and refrigerant supply.
- Suggest the customer return the vehicle to the location of previous service where the contamination may have occurred.
- If repairing, recover the refrigerant using only **dedicated equipment and containers. Never reintroduce contaminated refrigerant into the existing service equipment.** Contact a local refrigerant product retailer for available service if the facility does not have dedicated recovery equipment. This refrigerant must be disposed of in accordance with all federal and local regulations. In addition, replacement of all refrigerant system components on the vehicle is recommended.
- The air conditioner warranty is void if the vehicle is within the warranty period. Please contact Nissan Customer Affairs for further assistance.

General Refrigerant Precaution

INFOID:0000000003884817

WARNING:

- **Never breath A/C refrigerant, lubricant vapor or mist. Exposure may irritate eyes, nose and throat. Remove HFC-134a (R-134a) from the A/C system, using certified service equipment meeting requirements of SAE J-2210 [HFC-134a (R-134a) recycling equipment], or J-2209 [HFC-134a (R-134a) recovery equipment]. Ventilate work area before resuming service if accidental system discharge occurs. Additional health and safety information may be obtained from refrigerant and lubricant manufacturers.**
- **Never release refrigerant into the air. Use approved recovery/recycling equipment to capture the refrigerant each time an air conditioning system is discharged.**
- **Always wear eye and hand protection (goggles and gloves) when working with any refrigerant or air conditioning system.**
- **Never store or heat refrigerant containers above 52°C (126°F).**
- **Never heat a refrigerant container with an open flame. Place the bottom of the container in a warm pail of water if container warming is required.**
- **Never intentionally drop, puncture, or incinerate refrigerant containers.**
- **Keep refrigerant away from open flames. Poisonous gas is produced if refrigerant burns.**
- **Refrigerant displaces oxygen, therefore be certain to work in well ventilated areas to prevent suffocation.**
- **Never pressure test or leakage test HFC-134a (R-134a) service equipment and/or vehicle air conditioning systems with compressed air during repair. Some mixtures of air and HFC-134a (R-134a) have been shown to be combustible at elevated pressures. These mixtures, if ignited, may cause injury or property damage. Additional health and safety information may be obtained from refrigerant manufacturers.**

Refrigerant Connection

INFOID:0000000003884818

A new type refrigerant connection has been introduced to all refrigerant lines except the following location.

- Expansion valve to evaporator
- Refrigerant pressure sensor to liquid tank

O-RING AND REFRIGERANT CONNECTION

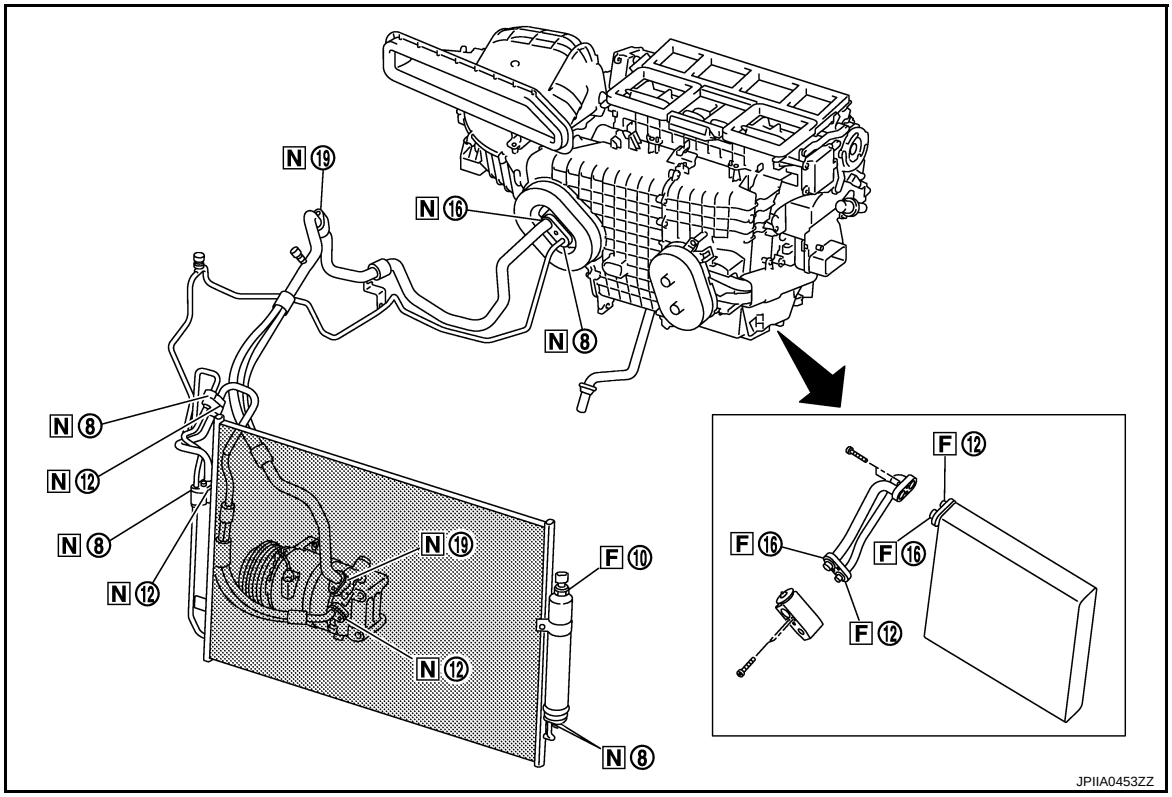

F. Former type refrigerant connection N. New type refrigerant connection

○: O-ring size

CAUTION:

The new and former refrigerant connections use different O-ring configurations. Never confuse O-rings since they are not interchangeable. Refrigerant may leak at the connection if a wrong O-ring is installed.

O-Ring Part Numbers and Specifications

Connection type	Piping connection point		Part number	QTY	O-ring size
New	Low-pressure flexible hose to low-pressure pipe		92474 N8210	1	19
	High-pressure pipe to condenser pipe assembly (Outlet)		92471 N8210	1	8
	Condenser pipe assembly (Inlet) to high-pressure flexible hose (One-touch joint)		92472 N8210	1	12
	Condenser assembly to condenser pipe assembly	Inlet	92472 N8210	1	12
		Outlet	92471 N8210	1	8
	Low-pressure pipe to expansion valve		92473 N8210	1	16
	High-pressure pipe to expansion valve		92471 N8210	1	8
	Compressor to low-pressure flexible hose		92474 N8210	1	19
	Compressor to high-pressure flexible hose		92472 N8210	1	12
	Liquid tank to condenser assembly	Inlet	92471 N8210	1	8
		Outlet		1	
Former	Refrigerant pressure sensor to liquid tank		J2476 89956	1	10
	Expansion valve to evaporator pipe assembly	Inlet	92475 71L00	1	12
		Outlet	92475 72L00	1	16
	Evaporator to evaporator pipe assembly	Inlet	92475 71L00	1	12
		Outlet	92475 72L00	1	16

WARNING:

Check that all refrigerant is discharged into the recycling equipment and the pressure in the system is less than atmospheric pressure. Then gradually loosen the discharge side hose fitting and remove it.

CAUTION:

Observe the following when replacing or cleaning refrigerant cycle components.

- **Store it in the same way at it is when mounted on the car when the compressor is removed. Failure to do so will cause lubricant to enter the low-pressure chamber.**
- **Always use a torque wrench and a back-up wrench when connecting tubes.**
- **Immediately plug all openings to prevent entry of dust and moisture after disconnecting tubes.**
- **Connect the pipes at the final stage of the operation when installing an air conditioner in the vehicle. Never remove the seal caps of pipes and other components until just before required for connection.**
- **Allow components stored in cool areas to warm to working area temperature before removing seal caps. This prevents condensation from forming inside A/C components.**
- **Thoroughly remove moisture from the refrigeration system before charging the refrigerant.**
- **Replace always used O-rings.**
- **Apply lubricant to circle of the O-rings shown in illustration when connecting tube. Be careful not to apply lubricant to threaded portion.**

Name : NISSAN A/C System Oil Type S

- **O-ring must be closely attached to the groove portion of tube.**
- **Be careful not to damage O-ring and tube when replacing the O-ring.**
- **Connect tube until a click can be heard. Then tighten the nut or bolt by hand. Check that the O-ring is installed to tube correctly.**
- **Perform leakage test and make sure that there is no leakage from connections after connecting line. Disconnect the line and replace the O-ring when the refrigerant leaking point is found. Then tighten the connections of seal seat to the specified torque.**

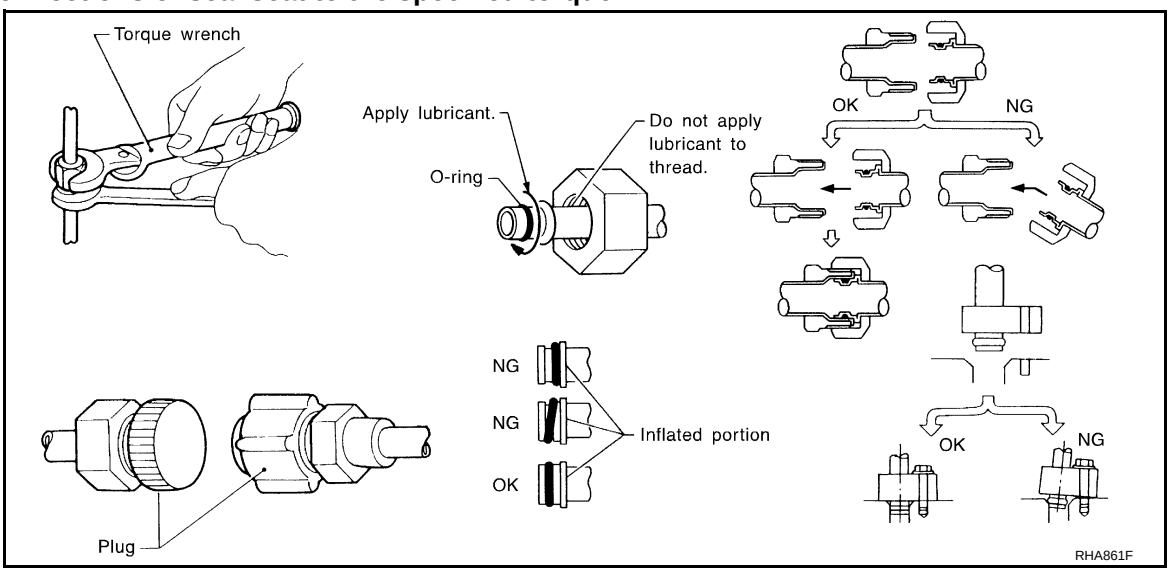

Service Equipment

INFOID:0000000003884819

RECOVERY/RECYCLING EQUIPMENT

Be certain to follow the manufacturer instructions for machine operation and machine maintenance. Never introduce any refrigerant other than that specified into the machine.

ELECTRICAL LEAK DETECTOR

Be certain to follow the manufacturer instructions for tester operation and tester maintenance.

VACUUM PUMP

The lubricant contained inside the vacuum pump is not compatible with the specified lubricant for HFC-134a (R-134a) A/C systems. The vent side of the vacuum pump is exposed to atmospheric pressure. So the vacuum pump lubricant may migrate out of the pump into the service hose. This is possible when the pump is switched OFF after evacuation (vacuuming) and hose is connected to it.
To prevent this migration, use a manual valve placed near the hose-to-pump connection, as per the following.

- Vacuum pumps usually have a manual isolator valve as part of the pump. Close this valve to isolate the service hose from the pump.
- Use a hose equipped with a manual shut-off valve near the pump end for pumps without an isolator. Close the valve to isolate the hose from the pump.
- Disconnect the hose from the pump if the hose has an automatic shut-off valve. As long as the hose is connected, the valve is open and lubricating oil may migrate.

Some one-way valves open when vacuum is applied and close under no vacuum condition. Such valves may restrict the ability of the pump to create a deep vacuum and are not recommended.

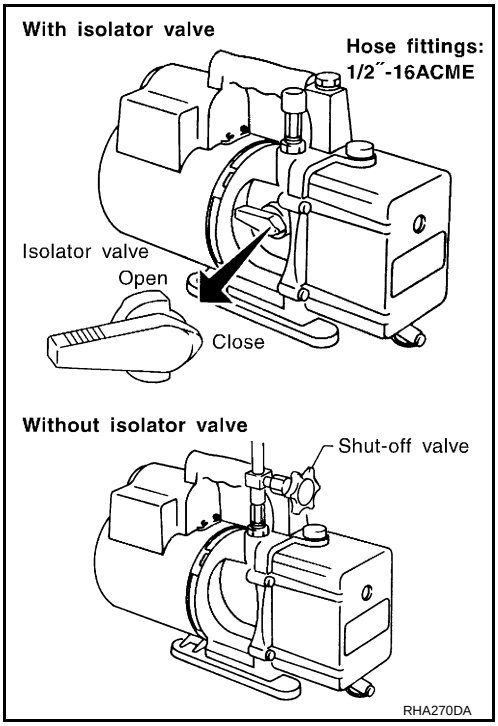

MANIFOLD GAUGE SET

Be certain that the gauge face indicates HFC-134a or R-134a. Be sure the gauge set has 1/2″-16 ACME threaded connections for service hoses. Confirm the set has been used only with refrigerant HFC-134a (R-134a) and specified lubricants.

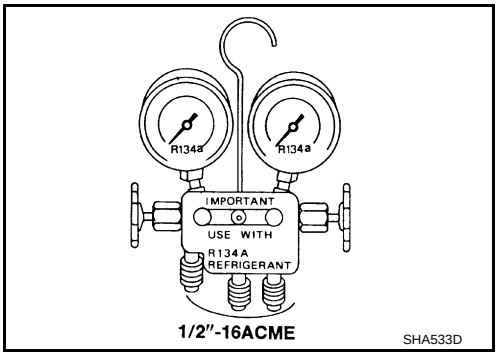

SERVICE HOSES

Be certain that the service hoses display the markings described (colored hose with a black stripe). All hoses must equip positive shut-off devices (either manual or automatic) near the end of the hoses opposite to the manifold gauge.

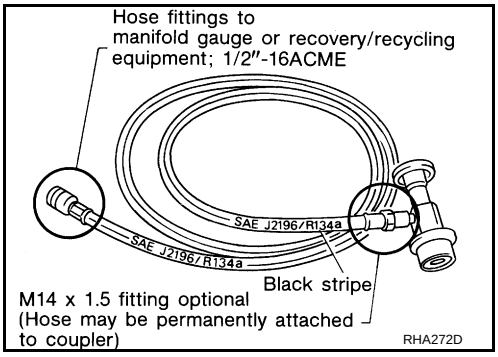

SERVICE COUPLERS

Never attempt to connect HFC-134a (R-134a) service couplers to a CFC-12 (R-12) A/C system. The HFC-134a (R-134a) couplers do not properly connect to the CFC-12 (R-12) system. However, if an improper connection is attempted, discharge and contamination may occur.

Shut-off valve rotation	A/C service valve
Clockwise	Open
Counterclockwise	Close

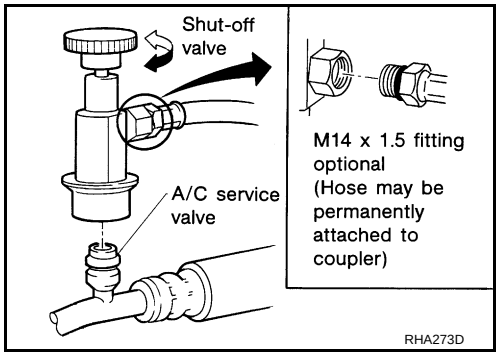

REFRIGERANT WEIGHT SCALE

Verify that no refrigerant other than HFC-134a (R-134a) and specified lubricants have been used with the scale. The hose fitting must be 1/2″-16 ACME if the scale controls refrigerant flow electronically.

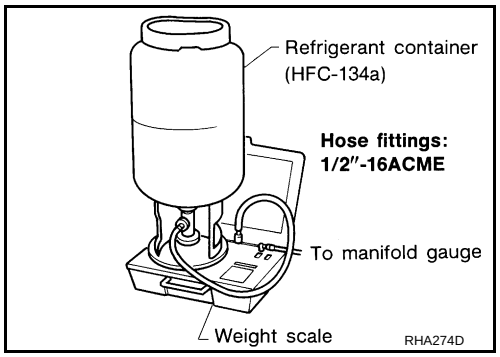

CHARGING CYLINDER

Use of a charging cylinder is not recommended. Refrigerant may be vented into the air from the top valve of the cylinder when filling the cylinder with refrigerant. Also, the accuracy of the cylinder is generally less than that of an electronic scale or of quality recycle/recharge equipment.

COMPRESSOR

General Precautions

INFOID:0000000003884820

CAUTION:

- **Plug all openings to prevent moisture and foreign matter from entering.**
- **Store it in the same way at it is when mounted on the car when the compressor is removed.**
- **Follow “Maintenance of Lubricant Quantity in Compressor” exactly when replacing or repairing the compressor. Refer to HA-28, "Maintenance of Lubricant Quantity".**
- **Keep friction surfaces between clutch and pulley clean. Wipe it off by using a clean waste cloth moistened with thinner if the surface is contaminated with lubricant.**
- **Turn the compressor shaft by hand more than five turns in both directions after compressor service operation. This equally distributes lubricant inside the compressor. Let the engine idle and operate the compressor for one hour after the compressor is installed.**
- **Apply voltage to the new compressor and check for normal operation after replacing the compressor magnet clutch.**

FLUORESCENT LEAK DETECTOR

General Precautions

INFOID:0000000003884821

CAUTION:

- **The A/C system contains a fluorescent leak detection dye used for locating refrigerant leakages. An ultraviolet (UV) lamp is required to illuminate the dye when inspecting for leakages.**
- **Always wear fluorescence enhancing UV safety goggles to protect eyes and enhance the visibility of the fluorescent dye.**
- **The fluorescent dye leak detector is not a replacement for an electrical leak detector (SST: J-41995). The fluorescent dye leak detector should be used in conjunction with an electrical leak detector (SST: J-41995) to pin-point refrigerant leakages.**
- **Read and follow all manufacture operating instructions and precautions prior to performing the work for the purpose of safety and customer satisfaction.**
- **A compressor shaft seal should not necessarily be repaired because of dye seepage. The compressor shaft seal should only be repaired after confirming the leakage with an electrical leak detector (SST: J-41995).**
- **Always remove any remaining dye from the leakage area after repairs are completed to avoid a misdiagnosis during future service.**
- **Never allow dye to come into contact with painted body panels or interior components. Clean immediately with the approved dye cleaner if dye is spilled. Fluorescent dye left on a surface for an extended period of time cannot be removed.**
- **Never spray the fluorescent dye cleaning agent on hot surfaces (engine exhaust manifold, etc.).**
- **Never use more than one refrigerant dye bottle (1/4 ounce /7.4 cc) per A/C system.**
- **Leak detection dyes for HFC-134a (R-134a) and CFC-12 (R-12) A/C systems are different. Never use HFC-134a (R-134a) leak detection dye in CFC-12 (R-12) A/C system, or CFC-12 (R-12) leak detection dye in HFC-134a (R-134a) A/C system, or A/C system damage may result.**
- **The fluorescent properties of the dye remains for three or more years unless a compressor malfunction occurs.**

IDENTIFICATION

NOTE:

Vehicles with factory installed fluorescent dye have a green label.
Vehicles without factory installed fluorescent dye have a blue label.

IDENTIFICATION LABEL FOR VEHICLE

Vehicles with factory installed fluorescent dye have an identification label on the front side of hood.